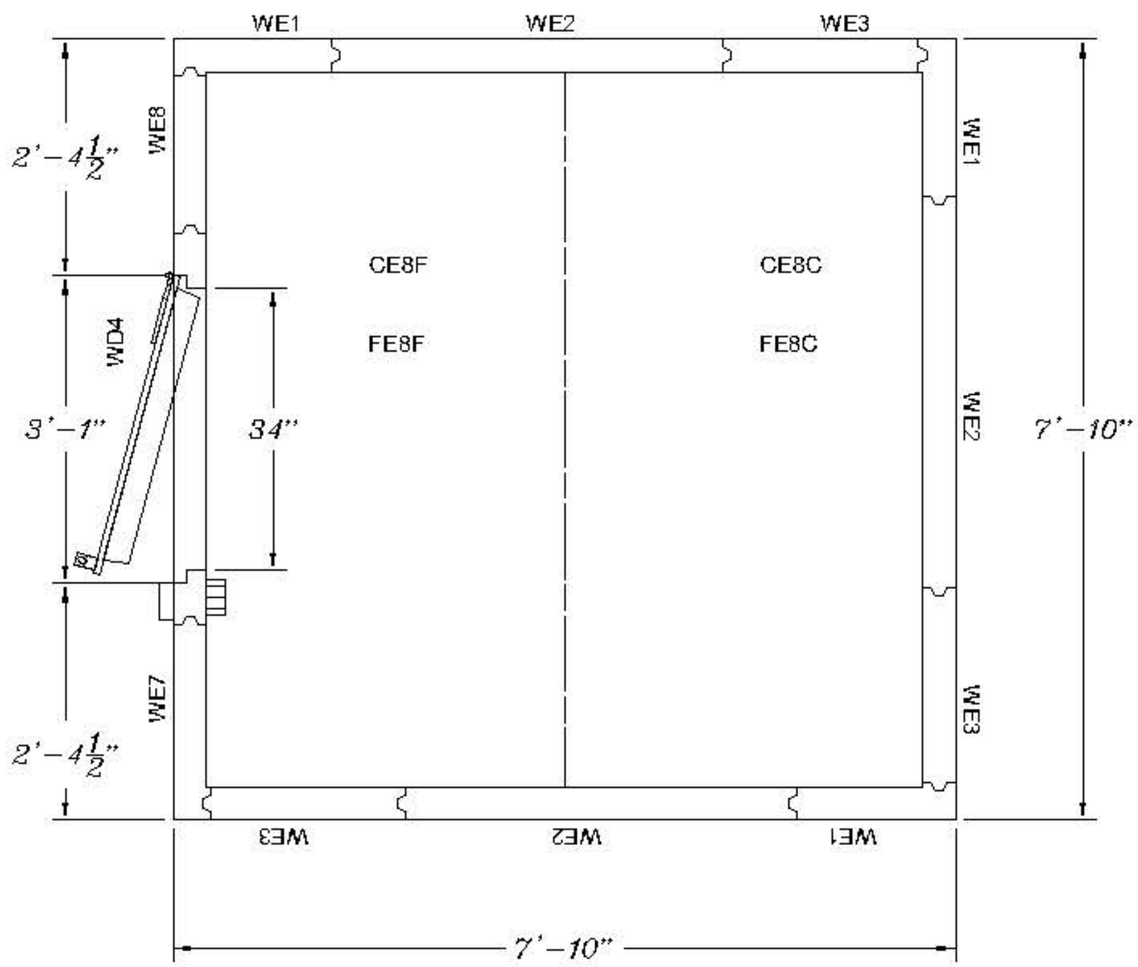

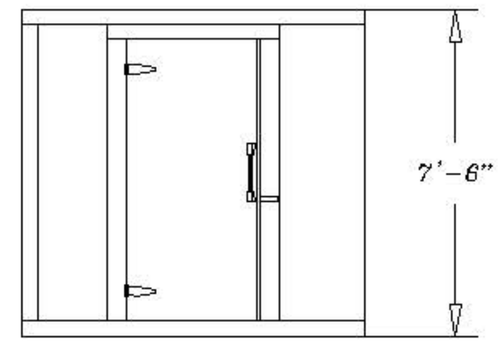

QUOTE DRAWING
Sign below for acceptance
X_____

Door hinge: Left___ Right___

Door location wall (centered): Left___ Front___

By signing here, you agree to our terms and conditions as outlined on www.uscooler.com terms. Panel configuration subject to U.S. Cooler final approval. A facsimile or emailed approval of this drawing (Cooler Quote) shall have the same force and effect as a signed original and shall, upon receipt by U.S. Cooler, be binding on both parties.

Materials:
ExtMetal:Galvalume
IntMetal:Galvalume
Foam:Extruded 4in.

Legend
Ceiling — — — — —
Floor — — — —

Cooler: 7'-10" x 7'-10" x 7'-6"
Scale: 1/2"= 1'

FASTCOOLER
by U.S. Cooler
401 DELAWARE ST. * QUINCY, IL 62301
TEL 217 223 2421 * 800 521 2665 * FAX 217 223 2424

CUSTOMER	
JOB#	P.O.# Job Ref.
DATE 06/06/2023	DRAWN C.G. 2.0
DWG. REF CI88FLL	APV.

To aid in packing, please indicate with an X the corner where installation will be starting.

Refrigeration Specifications

Qty	Manufacturer	Model	HP	Electrical	MCA	CmpRLA	CmpLRA	Dimensions DxWxH