MIWE bakecombi consisting of:

EC 6.1826 / CO 2.0608 / steam hood / SKII / proofer / rollers

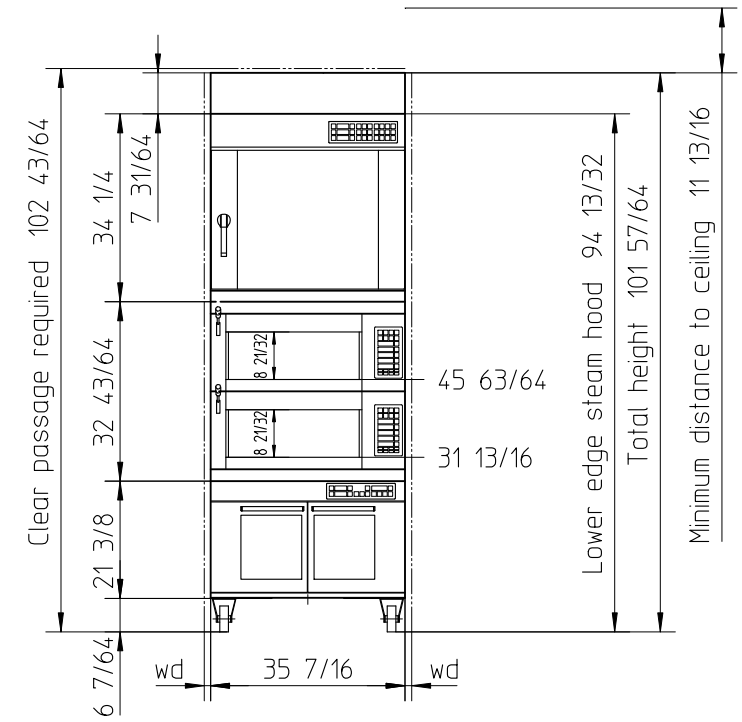

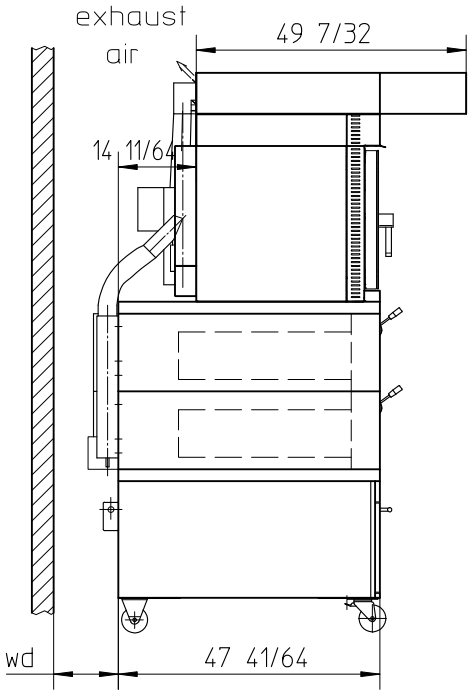

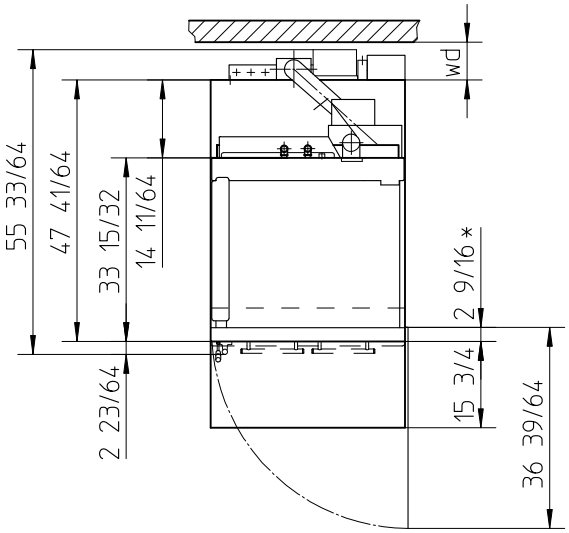

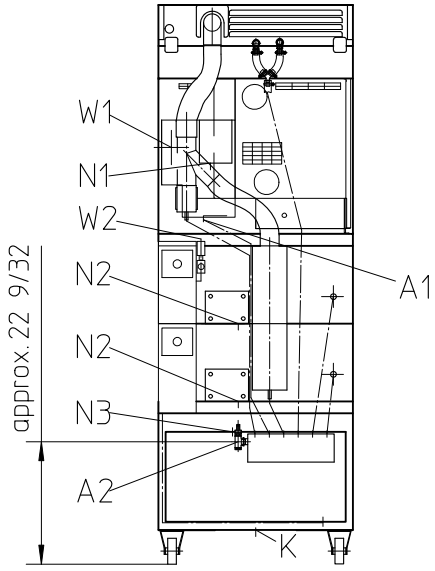

wd: Necessary minimum distance to walls:
to the side 1 3/16
to the rear side 6 57/64

* The customer should not install any covering in this area!

Minimum inside width of bring-in opening: 35 53/64

The door hinge (on the left or the right side) is to be carried out according to the order!

Total weight without baking trays: approx. 660kg

Attention!
The use of an air-cooled steam condenser in small rooms may lead to a significant increase in room temperature.

A1	Baking chamber water outlet 3/4"-hose -for model with CC with drain to on-site pipe - not to siphon	
A2	Water discharge	nom.diam. 1 7/64
K	Condensate discharge	1/2"-hose
N1	Power supply	9,9 kW (3x32A)**
N2	Power supply	5,5 kW (3x20A)**
N3	Power supply	2,0 kW (3x10A)**
N	Total power supply	22,8 kW (3x80A)**
W1	Water supply	R3/4"
W2	Water supply	R3/4"

** Protection by fuse with 208V; 3/-/PE; 60Hz

Water discharge provided by customer:
minimum nominal diameter 1 31/32!

We reserve the right to change any technical specifications!
Figure may differ from actual model!

Transmission, reproduction, utilization and communication of these technical data are not permitted unless expressly authorized by MIWE. Any noncompliance will result in obligation to pay damages. All rights reserved in the event of a patent grant or registration as a utility model.

CONFORMS TO NSF/ANSI STD 4
Intertek 2001758

ETL LISTED CONFORMS TO UL STD 197 CERTIFIED TO CSA STD C22.2 NO.109
Intertek 2001758

	Datum	Name	Maßstab
Bearbeiter	27.01.21	V. Shirin.	1:35
Geprüft	28.01.21	Schn. Mi.	Freig-Stat
Freigegeben	28.01.21	Schn. Mi.	

Michael Wenz GmbH · D-97450 Arnstein · Phone (+49 93 63) 68-0 · Fax (+49 93 63) 68 8400

MIWE