INSTALLATION AND OPERATION MANUAL

"CUCIMIX"
ROUND BRATT PANS WITH MIXER, GAS TYPE
MODD. UCBTG018_V1

FOR YOUR SAFETY:

Do not store or use gasoline or any other flammable liquids and vapours in the vicinity of this or any other appliance.

WARNING:

Improper installation, operation, adjustment, alteration, service or maintenance can cause property damage, injury or death.

Read the installation, operating and maintenance instructions thoroughly before installing, operating or servicing this equipment.

PURCHASER: Instructions to be followed in the event that the operator of this appliance smells gas must be posted in a prominent location. This information shall be obtained by consulting the local gas supplier.

IN CASE OF TECHNICAL ASSISTANCE, INDICATE:

MODEL : _____

NR. SERIAL : _____

☞	**The model and serial number are indicated on the rating plate**

Firex srl, Z.I.Gresal, 28
32036 Sedico
BELLUNO ITALIA
TELEPHONE: (0039) 852700 ; FAX: (0039) 852858

☞	**The manual is available upon request to:** **service@firex.it** **specifying model and serial number** **(The model and serial number data are indicated on the rating plate)**

.

TABLE OF CONTENTS

1 INTRODUCTION 6
1.1 SYMBOLS AND PICTORIALS 6
1.2 GENERAL REMINDERS 6
1.3 IMPORTANT NOTES FOR INSTALLATION 7
2 SAFETY 8
2.1 OVERVIEW 8
2.2 WARNINGS 9
2.3 TABLE OF PAN PRODUCT LEVELS 12
3 DESCRIPTION OF THE MACHINE 13
3.1 DESCRIPTION 13
3.2 MATERIALS 13
3.3 OPTIONAL 13
3.3.1 SHOWER FOR WASHING 13
3.3.2 CASTERS 13
3.4 OPERATING PARTS 14
4 TECHNICAL DATA 15
4.1 TECHNICAL DATA UCBTG018_V1 15
4.2 PLANT CONNECTION UBTG018_V1 16
4.3 GAS INLET PRESSURES 17
4.4 GAS MANIFOLD PRESSURE; NOZZLES;PRIMARY AIR DISTANCE 17
4.5 FIG. MAIN BURNER – PRIMARY AIR REGULATION 18
4.6 FIG. GAS CONTROL VALVE (822) 19
5 TRANSPORT, STORAGE, UNPACKING 20
5.1 TRANSPORT 20
5.2 STORAGE 21
5.3 RECEIPT AND UNPACKING 21
6 INSTALLATION 22
6.1 INSTALLATION CODES AND STANDARDS 22
6.2 REQUIREMENTS FOR THE INSTALLATION SITE 22
6.3 POSITIONING 23
7 CONNECTIONS 24
7.1 ELECTRICAL CONNECTION 24
7.2 WATER CONNECTION (optional) 25
7.3 GAS CONNECTION 26
7.3.1 CONTROL OF THE GAS PRESSURE 27
8 COMMISSIONING AND TESTING 28

9 USING THE MACHINE 30
10 TOUCH SCREEN 30
11 MAIN MENU 31
12 SETTINGS MENU 32
13 PROGRAMS MENU 33
14 COOKING LAYOUT 34
14.1 STATUS BAR 35
14.2 COOKING AREA 36
14.2.1 COOKING ICONS (MEANING) 37
14.3 MESSAGE COLUMN (L) 38
14.4 FUNCTION COLUMN (R) 38
14.5 FUNCTION BAR 39
14.5.1 START-STOP KEY FOR RUNNING PROGRAMS 39
14.5.2 EXTRA KEY 41
14.5.3 COOKING WITH DELAY TIMER KEY 41
15 COOKING METHODS IN DETAIL 42
15.1 COOKING 42
16 SETTING SETPOINT PARAMETERS 43
16.1 SETTING SETPOINT VALUES WITH THE KEYPAD 43
17 COOKING PARAMETERS SETTING 45
17.1 SETTING COOKING METHOD AND TEMPERATURE 45
17.2 SETTING COOKING TIME 46
18 CREATING PROGRAMS (MULTI-PHASE) 48
18.1 CREATING/DELETING PHASES 48
18.2 MESSAGE SETTINGS 50
18.3 SAVING A PROGRAM 54
18.4 EDIT/ COPY/ RENAME PROGRAM 55
18.5 DELETING A PROGRAM 56
19 RUNNING A PROGRAM/MANUAL COOKING 56
19.1 RUNNING A PROGRAM/MANUAL COOKING 56
19.2 END OF COOKING 57
20 RUNNING PROGRAMS (MULTI-PHASE) 58
20.1 RUNNING PROGRAMS (MULTI-PHASE) 58
20.2 END OF PROGRAM 60
21 COOKING WITH DELAY TIMER 61
22 USING THE MIXER 62
22.1 MIXER SETTINGS 62
22.2 STARTING THE MIXER (MANUAL COOKING PROGRAM) 63
22.3 STARTING THE MIXER (MULTI-PHASE PROGRAM) 64

23 MOVING THE PAN 65
24 CLEANING AND CARE 67
24.1 GENERAL INFORMATION 67
24.2 DAILY CLEANING 67
24.3 MIXER CLEANING 68
24.4 ASSEMBLY AND DISASSEMBLY VERTICAL SCRAPER FROM THE MIXER 71
24.5 PRECAUTIONS IN CASE OF PROLONGED INACTIVITY 73
24.6 PRECAUTIONS IN CASE OF MALFUNCTION 73
25 MAINTENANCE 73
25.1 MAINTENANCE OF THE APPLIANCE 73
25.2 PERIODIC MAINTENANCE 74
26 DISPLAY MESSAGES 76

1 INTRODUCTION

1.1 SYMBOLS AND PICTORIALS

ATTENTION!
This indicates a dangerous operation or situation.

ATTENTION!
This indicates a regulation or an obligation.

ATTENTION!
This indicates the prohibition to carry out an operation.

NOTE!
This indicates a recommendation or information deemed to be particularly important.

1.2 GENERAL REMINDERS

The business units manager, where the unit will be installed, have an obligation, in accordance with the regulations, read carefully the contents of this manual and teach the operators and maintainers involved for parts that they compete.

This manual contains all the necessary information for correct and safe use of our appliances. **Ensure this manual is conserved correctly so that it is always available to all users of the machine!**

All installation work must only be carried out by a company belonging to the relevant industry register.

The manufacturer does not assume any responsibility or warranty commitment for accidents and damage due to non-compliance with the requirements or installation or maintenance not in accordance with safety standards.
Also applies in case of improper use of the appliance by the operator.

Any damage caused by water/steam infiltration or insects, due to the machine panels not being closed (after installation or maintenance) shall void any warranty claims.

Do not attempt to operate this unit in the event of a power failure.

Intended for commercial use only. Not for household use

1.3 IMPORTANT NOTES FOR INSTALLATION

The following points are to insure the safe installation and operation of this equipment:

Before connecting any parts of the appliance to supplies, make sure that the latter is equivalent the requirements stated in the rating plate, if the appliance has been designed for these supplies.

Observe all clearance requirements.

Disconnect the electrical power supply to the appliance before cleaning or servicing unit.

All service must be performed by a qualified Technician.

Keep the appliance area free and clear of combustible materials.

Do not obstruct the flow of combustion and ventilation air.

Keep adequate distance for air openings into the combustion chamber.

Always wear the personal protective equipment required by the regulations.

Follow the fire prevention regulations very carefully.

In the water and gas supply systems the absence of "water hammer" must be guaranteed.

Damage to the operation of the machine.

2 SAFETY

2.1 OVERVIEW

- Read the warnings contained in this manual carefully as they provide important information regarding safe installation, maintenance and use.
- These appliances should only be used by personnel trained to use them.
- The appliance must be operated under close supervision.
- The appliance must only be used for the purpose for which it was explicitly designed, any other use is improper and as a result considered dangerous.
- This appliance is intended for professional use and therefore must be used by appropriately trained personnel
- Take particular care during operation as the outside of the appliance can also become very hot!
- It is essential to contact a specialist support centre for any repairs or maintenance.
- All the important information about the appliance for technical support can be found on the rating plate .
- When requesting technical support, you should describe the problem in detail in order to allow the technician to immediately understand the cause and type of fault.
- Certain operational faults may be due to operator error, therefore it is important for staff to receive comprehensive training.

2.2 WARNINGS

	All installation and maintenance work must only be carried out by a company belonging to the relevant industry register.
	Fire protection regulations must be strictly adhered to.
	The machine should be serviced at least once a year to ensure it is in prime condition. Therefore, it is recommended to sign a maintenance contract with a reliable technical support centre.
	The appliance can only be used for cooking food in industrial kitchens. **Any other use is considered improper use and, therefore, dangerous.** **Intended for commercial use only. Not for household use.**
	The appliances should only be used by personnel trained to use them. The appliance must be operated under close supervision.
	Keep the appliance area free and clear of combustible materials.
	Do not attempt to operate this unit in the event of a power failure.
	Do not obstruct the flow of combustion and ventilation air.
	Respect a 5 minute complete shuttoff period before the appliance is relighted.
	Any damage caused by water/steam infiltration or insects, due to the machine panels not being closed (after installation or maintenance) shall void any warranty claims.
	The manufacturer assumes no responsibility for injuries or damage due to non-compliance with safety regulations or improper use of the appliance by the operator.

	The appliance is not intended to be used by persons (including children) with reduced physical, sensory or mental abilities, or lack of experience or knowledge, unless they are supervised, by someone responsible for their safety, or given instructions regarding the use of the appliance. **Children should be supervised at all times so that they do not play with the appliance.**

	Wear rubber gloves, goggles or a face shield and protective clothing when using the appliance. **Risk of scalding!**
	The machine controls can only be hand operated. Damage caused by the use of pointed, sharp and similar objects shall void any warranty claims.
	It is essential to wash the inside of the cooking pan thoroughly before setting up the appliance for first use.
	The cooking pan must be filled respecting the minimum and maximum values (including the food to be cooked) indicated in the table depending on the cooking method.
	It is absolutely forbidden to place your hands or other objects in the pan when the mixer is running.
	When emptying the pan, the operator must position him/herself on the right-hand side of the machine (control side) being careful of any hot content spilling from the pan and avoiding any splashes. **The operator must also ensure that any persons present in the room maintain a safe distance of at least 2 metres from the perimeter of the machine, both while emptying and replacing the pan.**
	When opening the lid pay particular attention to the steam escaping from the front of the lid.
	Never use as a deep fryer.
	Take particular care during operation as the surfaces become hot.
	When filling the pan with water, using a tap or shower (optional), make sure that there is no hot oil in the pan.
	The appliance must be disconnected from the power supply during cleaning, maintenance and replacement of the internal parts.
	When cleaning the appliance, never use jets of water or a steam cleaner to avoid infiltration and damage to components.
	Most cleaning products are harmful to the skin, eyes, mucous membranes, and clothes. Precautions must be taken. Wear rubber gloves, safety glasses/goggles or a face shield, and protective clothing. Read the warnings carefully and follow the directions on the label of the detergent.
	The floor may be slippery in the area around the appliance.

	If the power cord is damaged, it must be replaced by the manufacturer or by a servicing company or a similarly qualified person in order to avoid hazards.
	When an appliance is supplied on casters (optional), there is a restraint on the appliance and, if disconnected of the restraint is necessary, to reconnect this restraint after the appliance has been returned to its original position.
	Switch off the appliance in case of breakdown, malfunction or water leakage. Disconnect all water, electricity and gas supplies and contact a support centre.
	In the event of a fire, cover the cooking pan by closing the lid and disconnect all water, electricity and gas supplies.
	NEVER USE WATER to extinguish a fire.
	Do not store or use flammable gases or liquids near the machine.

2.3 TABLE OF PAN PRODUCT LEVELS

ATTENTION:

The cooking pan must be filled respecting the minimum and maximum values (including the food to be cooked) indicated in the table depending on the cooking method.

ATTENTION:

Failure to comply with this requirement may cause serious injury to persons and compromise the operation of the appliance

Cooking method	PAN LEVELS TO BE RESPECTED

3 DESCRIPTION OF THE MACHINE

3.1 DESCRIPTION

Round Bratt pans with built-in mixer, ideal for cooking meat, sauces, risotto, fillings and for all those dishes that require the ingredients to be worked gently.
Uniform cooking and a high-quality end product are the result of cutting edge and simple to use technology.

The appliance can only be used for cooking food in industrial kitchens. **Any other use is considered improper use and, therefore, dangerous**

3.2 MATERIALS

Cooking pan in AISI 304 grade stainless steel
Lid in AISI 304 grade stainless steel
Outer cover in fine satin AISI 304 grade stainless steel.
Self-supporting frame in AISI 304 grade stainless steel.
Adjustable feet for levelling in AISI 304 grade stainless steel, equipped with removable cover for cleaning operations.

3.3 OPTIONAL

3.3.1 Shower for washing

The shower has a twist-out type system. Pull out gently until the desired or maximum length is reached. To return, it is necessary to tug gently outwards and then twist it back into position.

Press the black lever to operate the water jet. The flow of water immediately stops when released. If you want to have a continuous jet of water, turn the black lever as far as you can.

Handle this accessory with care and store it in its housing at the end of each use to avoid damaging it.
Make sure there is no hot oil in the pan before using the jet.

3.3.2 Casters

The appliances can be installed on casters. The front two have brakes: to engage them, press gently on the lever above the castor, to release them, press more firmly.

Always engage the castor brakes if you do not have to move the appliance.

3.4 OPERATING PARTS

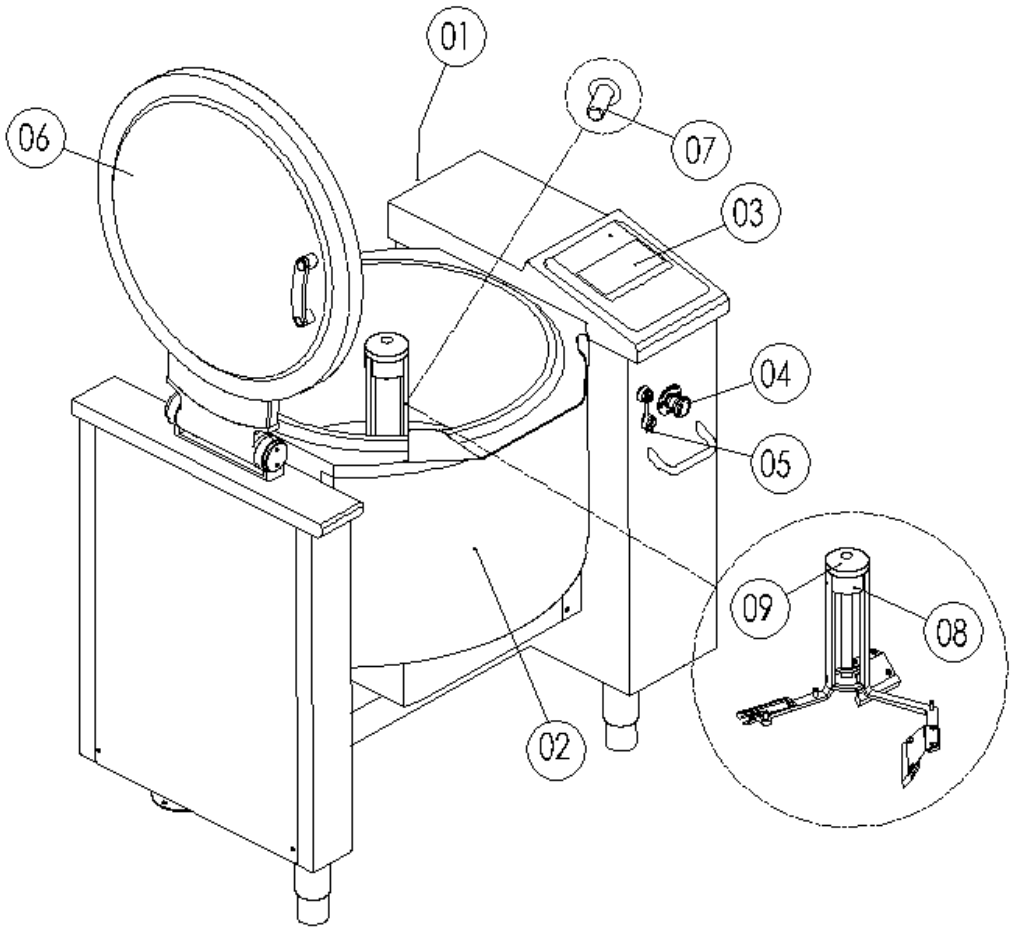

01	Rating plate
02	Cooking pan
03	Control panel
04	Emergency button
05	Plug USB
06	Lid
07	Sensor in the pan
08	Mixer
09	Mixer locking ring

4 TECHNICAL DATA

4.1 TECHNICAL DATA UCBTG018_V1

		UCBTG018_V1
TECHNICAL DATA (DIMEMSIONS)		
Equipment dim.A	Inches	42.52
Equipment dim.B	Inches	32.68
Equipment dim.H1	Inches	42.53
Equipment dim.H	Inches	37.21
Equipment dim.H2	Inches	67.92
Tank drain height H3	Inches	14.57
TECHNICAL DATA (FUNCTIONALITY)		
Kettle diameter	Inches	23.62
Pan dimension H	Inches	11.42
Pan area	Inches²	438
Overvall volume	Gallons	22
Useful volume	Gallons	18
Mixer speed	rpm	7÷22
Mixer torque	Nm	96
Mixer power	kW	0.37
Temperature	°F (°C)	68÷428 (20÷220)
TECHNICAL DATA (INSTALLATION)		
Electric power	kW	0.6
(E) Voltage/Input **	V (A)	2 PH.208V (2.8 A) ; 2 PH.240 V (2.5 A) ; 2 PH.220 V (2.5 A)
IPX	IPX	4
Gas power	BTU/HR	54,600
(G) Gas connection	Ø"	1/2 " NPT
Water pressure (optional)	PSI (kPa)	25-50 (170-345)
(A) Hot water inlet (optional)	Ø"	1/2 "
(B) Cold water inlet (optional)	Ø"	1/2 "
Sound level	dbA	< 75
TECHNICAL DATA (STORAGE/MOVEMENT)		
Packaging dim.A	Inches	48
Packaging dim.B	Inches	39
Packaging dim.H	Inches	50
Volume	ft³	53
Net weight	lbs	529
Gross weight	lbs	617

****Verify on rating plate .**

4.2 PLANT CONNECTION UBTG018_V1

LEGEND:			
E	Electrical connection (Conduit 1/2”)	**Optional**	
G	Gas connection	**A**	Hot water connection
BACK	See “CLEARANCE REQUIREMENTS”	**B**	Cold water connection

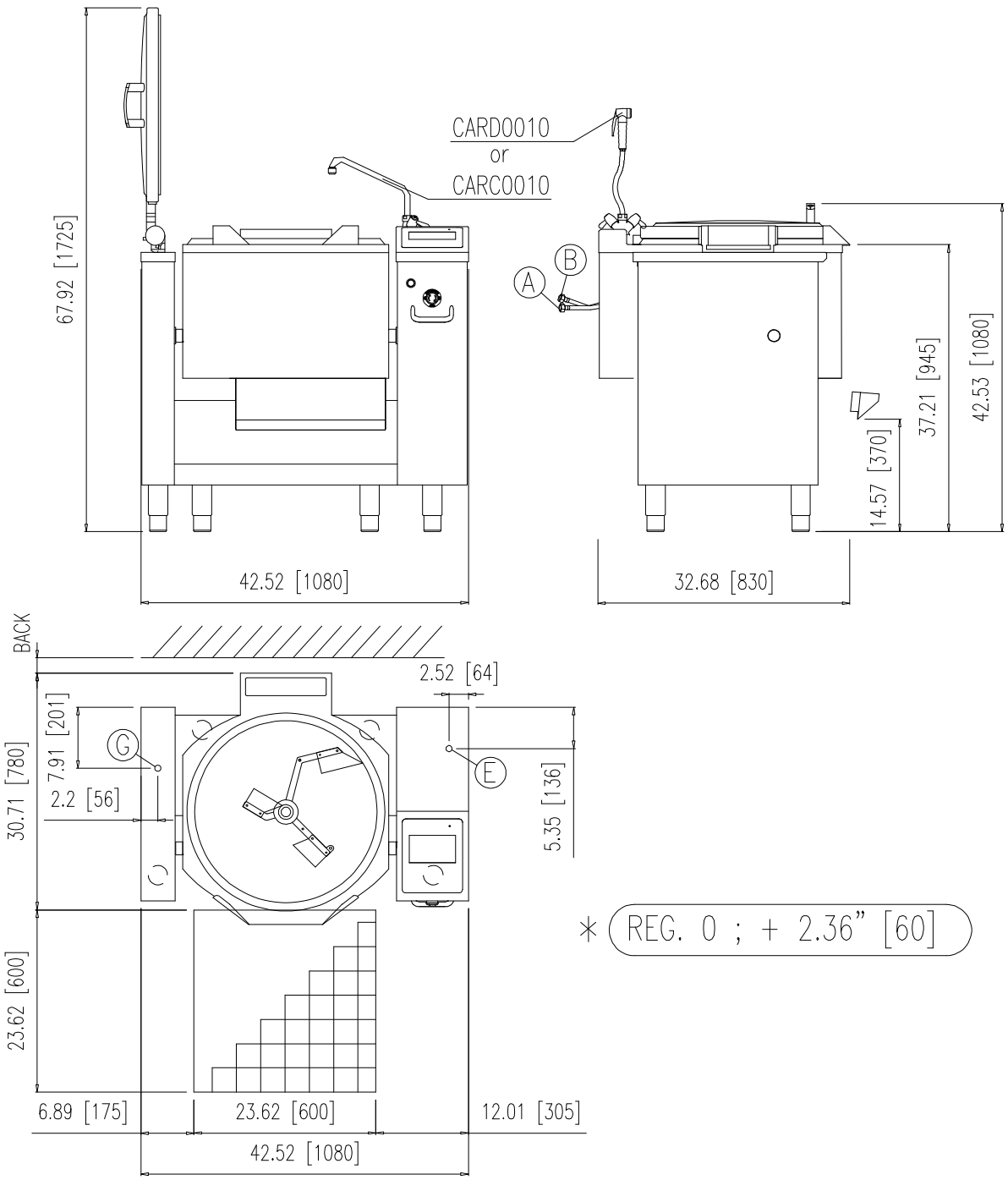

4.3 GAS INLET PRESSURES

GAS REQUIREMENT TABLE		Type of gas	
		Natural	Propane
Operating gas pressure	in W.C. (mbar)	7.0 (17.4)	11.0 (27.4)
Min.Supply gas pressure	in W.C. (mbar)	6.0 (14.9)	9.0 (22.4)
Max.Supply gas pressure	in W.C. (mbar)	10.5 (26.1)	13.0 (32.3)

Warning: if the supply pressure is lower than " **Min.Supply gas pressure**", the icon appears in the display

GAS

and the heating does not activate.

Contact your gas company for correct supply line sizes.

Warning: if the supply pressure exceeds " **Max.Supply gas pressure**", a pressure regulator must be installed, to provide a maximum of 10,5" W.C (for natural gas) or 13" W.C (for propane gas) gas pressure to the gas control valve.

4.4 GAS MANIFOLD PRESSURE; NOZZLES;PRIMARY AIR DISTANCE

UCBTG..V1		UCBTG018_V1
Rated heating power	BTU/HR	54,600
MANIFOLD PRESSURE		
Natural gas	in W.C. (mbar)	6.6 (16.4)
Propane gas	in W.C. (mbar)	10.6 (26.3)
NOZZLES (Nr.x Ø)		
Natural gas	Ø 1/100 mm	2x230
Propane gas	Ø 1/100 mm	2x155
PRIMARY AIR DISTANCE (H)		
Natural gas	Inches (mm)	0.394 (10)
Propane gas	Inches (mm)	0.985 (25)

4.5 FIG. MAIN BURNER – PRIMARY AIR REGULATION

LEGEND:			
A	Burner	**D**	Air regulation square
B	Injector (tab."GAS DATA")	**E**	Square lock screws
C	Injector pipe	**H**	See tab."GAS DATA"

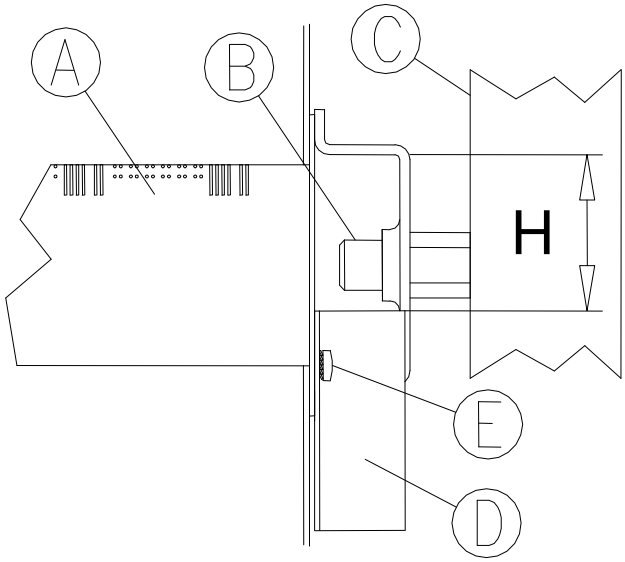

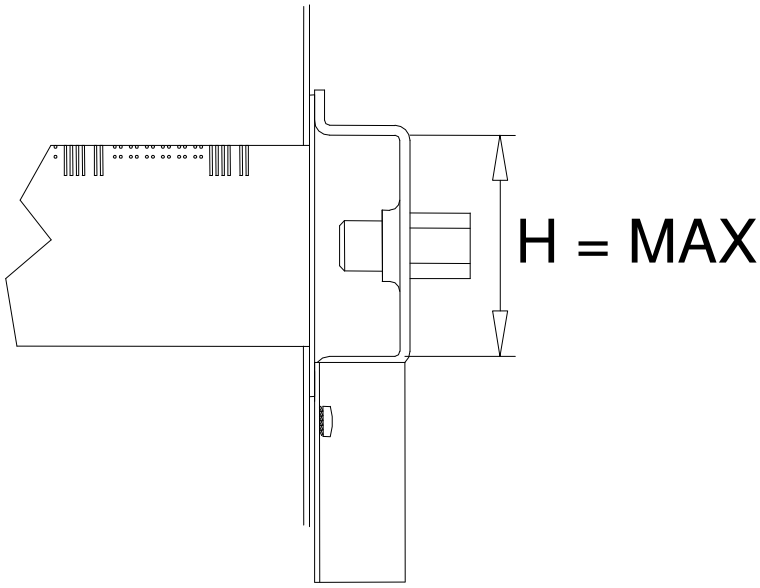

4.6 FIG. GAS CONTROL VALVE (822)

LEGEND:			
A1	Coil 6,1 Ω (EV1)	**C**	Outlet pressure intake (manifold pressure)
A2	Coil 39,1 Ω (EV2)	**D**	Pressure regulator
B	Inlet pressure intake (supply pressure)		

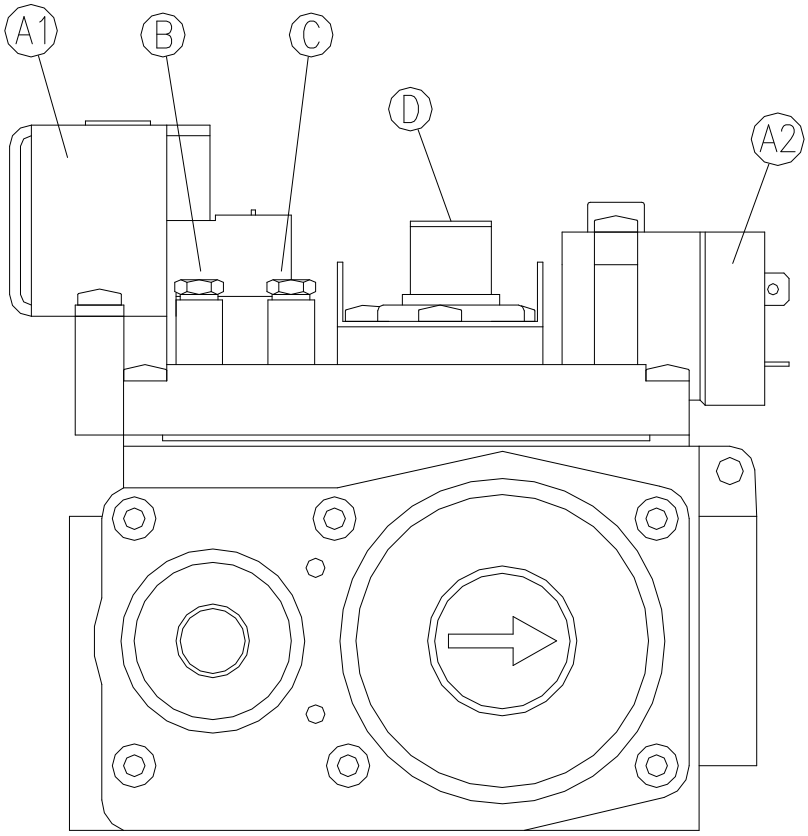

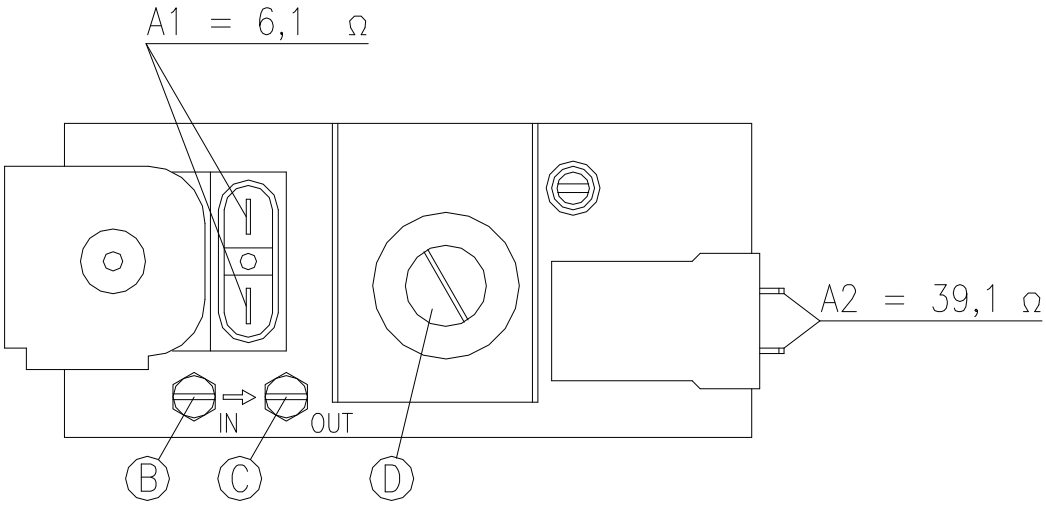

5 TRANSPORT, STORAGE, UNPACKING

5.1 TRANSPORT

The movement of the machine must be performed by a qualified operator for use of lifting and transport equipment in accordance with the laws of the country of the user of the machine.

The machine can be transported with a normal means (forklift or transpallet)capable of supporting its weight and size (see.tab. "**TECHNICAL DATA**").

Always check the correct balance of the weight of the machine (B = center of gravity) to prevent unexpected movement or dropping to the floor of the car with damage to people or things around you.

For transport on pallets, **Fig.1**
For transport without pallets, **Fig.2**

Fig.1

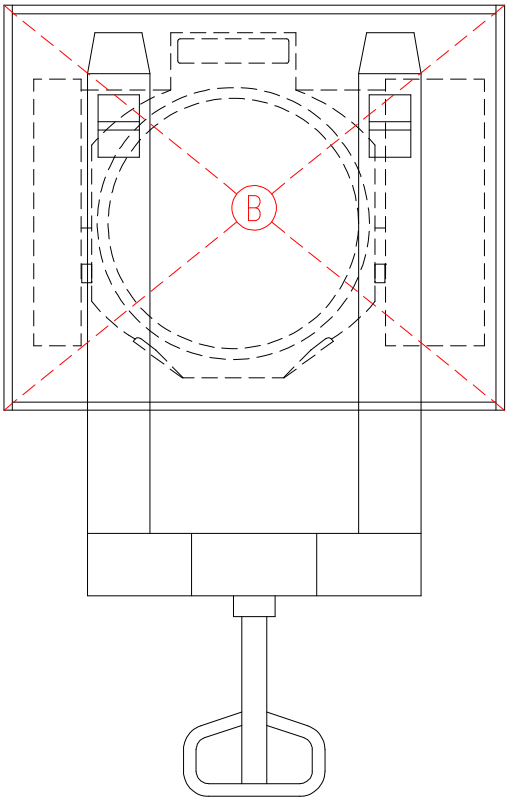

Fig.2

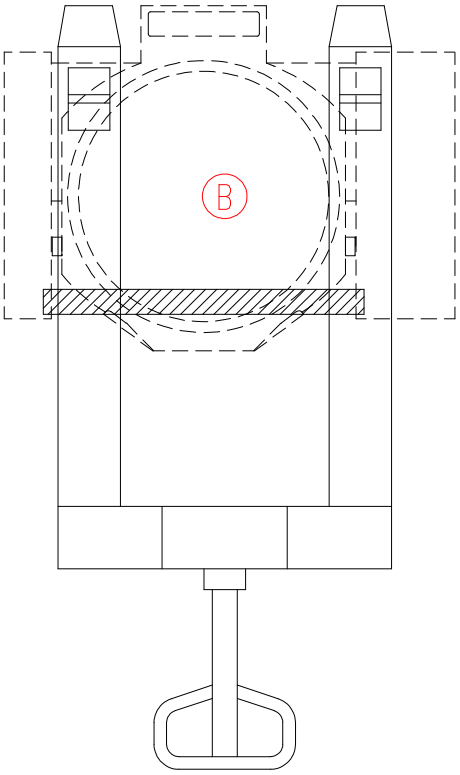

5.2 STORAGE

Store the appliance in a closed environment protected against atmospheric agents. Keep the appliance away from humidity and temperature ranges

Protect the appliance from shocks and stresses

Ensure that the appliance is in contact with corrosive substances

5.3 RECEIPT AND UNPACKING

Upon receipt of the machine check that the packaging is undamaged. If it does not withdraw the conditional commodity producing photographic evidence of any apparent damage.

After removing the packaging, check that the appliance is undamaged.In case of visible damage, do not connect the appliance but contact the sales outlet immediately.

Check for the presence of individual components with packing lists.

Remove from the panels of the machine the protective film PVC .

Before disposing of the packaging materials **make sure that they do not contain machine elements** (accessory; tools; documentation, etc)

Dispose of the packaging components in accordance with the regulations in force on waste disposal.

6 INSTALLATION

6.1 INSTALLATION CODES AND STANDARDS

Installation must conform with local codes, or in the absence of local codes, with the National Fuel Gas Code, ANSI Z223.1/NFPA 54, or the Natural Gas and Propane Installation Code, CSA B149.1, as applicable.

1. The appliance and its individual shut off valve must be disconnected from the gas supply piping system during any pressure testing of that system at pressures in excess of ½ psi (3.5 kPa).
2. The appliance must be isolated from the gas supply piping system by closing its individual manual shut off valve during any pressure testing of the gas supply piping system at test pressures equal to or less than ½ psi (3.5 kPa).

Electrical grounding must be provided in accordance with local codes, or in the absence of local codes, with the National Electrical Code, ANSI/NFPA 70, or the Canadian Electrical Code, CSA C22.2, as applicable.

The electrical diagram is located on the inside of side panel of right hand console.

6.2 REQUIREMENTS FOR THE INSTALLATION SITE

The room in which the appliance is to operate must be well ventilated.
The appliance belongs to the installation class A1 (no direct connection of a chimney of flue exhaust system is required), so it is very important for the environment in which it is installed to be well-aired and provided with all the safety openings prescribed for its power.

VENTILATION

The appliance are only to be installed under a ventilation hood in a room which has provisions for adequate make up air.

Information on the construction and installation of ventilating hoods may be obtained from the standard for “Vapor Removal from Cooking Equipment”, NFPA No. 96 (latest edition), available from the National Fire Protection Association, Batterymarch Park, Quincy, MA, USA, 02269.

The gas shut off valve, the electrical isolating switch and the water shutoff valves must both be located near to the appliance, within easy reach for the user.

6.3 POSITIONING

CLEARANCE REQUIREMENTS

This unit must be installed in accordance with the clearances shown on the rating label which is adhered to the unit.

CLEARANCES		
	Combustible construction	**Noncombustible construction**
Back	**8" (200 mm)**	**2" (50 mm)**
Right Side	**25" (635 mm)**	**25" (635 mm)**
Left Side	**25" (635 mm)**	**25" (635 mm)**
"Suitable for installation on combustible floors"		

If the appliance is equipped with casters (optional), the **CLEARANCES**, right side and left side, become equal to 0" (ZERO).
The CLEARENCE "Back" remains that shown in the table !

In order to be able to service the appliance with casters, remove the appliance from the installed position taking care not to put transmission of strain to the gas connector or utility connections.

The appliance must stand level. Small differences in level can be eliminated by screwing or unscrewing the adjustable feet. **A significantly uneven or sloping stance can affect the operation of the appliance adversely.**
Adjust the bottom foot on each leg to overcome an uneven floor.

If the appliance is equipped with casters (optional), leveling must be ensured by the floor. If the floor is not level, it must be made such with thicknesses in correspondence of the wheels. The surface and the inclination of the shims must be such as not to affect the stability of the machine.

After positioning remove the anterior bar under the frame.
It is advisable to keep the bar so that they are available for subsequent movements.

7 CONNECTIONS

Attention: When the appliance is equipped with casters (optional), the installation shall be made with a connector complying with either ANSI Z21.69 • CSA 6.16 and a quick-disconnect device complying with ANSI Z21.41 • CSA 6.9.

Adequate means must be provided to limit the moviment of the appliance without depending on the connector and the quick-connector device or its associated piping to limit the appliance movement.

The location where the restraining means may be attached to the appliance are the two eyebolts positioned on the back of the appliance.

Utility connections must be made with flexible lines of sufficient length to allow the equipment to be moved for cleaning of the equipment and adjacent area.

7.1 ELECTRICAL CONNECTION

During installation, observe the regulations provided by the local electricity company.

The appliance is supplied to operate according to the power supply indicated on appliance's rating plate.

A separate fused disconnect switch must be supplied and installed. The appliance must be electrically grounded by the installer.

The earthing system must be efficient.

The electric supply must match the power requirements specified on the appliance's rating plate.

The copper wiring must be adequate to carry the required current at the rated voltage.

The connection point is indicated in the "**PLANT CONNECTION**"

Ensure main power is turned off before connecting wires.

Remove the screws of the cover in the right side of the appliance. Remove the cover.

Insert the cable through the cable gland. Carefully connect the conductors to the corresponding terminals. The earth conductor must be longer than the other conductors, so as to disconnect last in the event of a strong pull of the cable or break of the cable gland. Tighten the cable gland.

Replace the cover and secure it with screws.

Any damage caused by water/steam infiltration or insects, due to the machine panels not being closed (after installation or maintenance) shall void any warranty claims.

7.2 WATER CONNECTION (optional)

The equipment is to be installed with adequate backflow protection to comply with applicable federal, state, and local codes.

The water pressure in the supply network must be between the values indicated in the **"INSTALLATION TECHNICAL DATA"** table.
If not, install a pressure reducer upstream of the appliance.

Before making the water connection, carefully clean the connection pipe. It is advisable to let the water flow to clean the whole piping. Any impurities could compromise the operation of the machine.

The diameter of the connections is indicated in **"INSTALLATION TECHNICAL DATA"**
The connection point is indicated in the **"PLANT CONNECTION"**

Install a shut-off valve upstream of the appliance, one for each water connection on the appliance, near the appliance and in a position easily accessible by the user.

7.3 GAS CONNECTION

The choice of the gas piping depends on the diameter required for the type of gas, appliance and installation and should be performed in conformity with current regulations.

The rating plate on the lower right side of the unit indicates the type of gas your unit is equipped to burn. Do NOT connect to any other gas type.

Each unit is equipped with an internal pressure regulator .

The manifold pressure is show in table "**GAS MANIFOLD PRESSURE**"

An adequate gas supply is imperative.

Undersized or low pressure lines will restrict the volume of gas required for satisfactory performance.

Fluctuations of the normal supply pressure more than 20% on natural gas, and 10% on propane gas, will create problems and affect burner operating characteristics.

The gas inlet pressure is show in table "**GAS INLET PRESSURE**"

With all units operating simultaneously, the manifold pressure on all units should not show any appreciable drop.

Purge the supply line to clean out any dust, dirt, or other foreign matter before connecting the line to the unit.

It is recommended that an individual manual shut off valve be installed in the gas supply line to the unit.

Use pipe joint compound which is suitable for use with LP gas on all threaded connections. Test pipe connections thoroughly for gas leaks.

WARNING:

All connections must be checked for leaks, after the unit has been put in operation. Use soapy water only for testing on all gases.

Never use an open flame to check for gas leaks.

NOTICE: If applicable, the vent line from the gas appliance pressure regulator shall be installed to the outdoors in accordance with local codes or, in the absence of local codes, with the National Fuel Gas Code, ANSI Z223.1/NFPA 54, or the Natural Gas and Propane Installation Code CSA B149.1, as applicable.

The diameter of the connections is shown in "**TECNICAL DATA**"
The point of connection is shown in the "**PLANT CONNECTIONS**"

7.3.1 CONTROL OF THE GAS PRESSURE

Gas pressure is measured directly in the gas valve.
A = GAS INLET PRESSURE INTAKE
B = GAS MANIFOLD PRESSURE INTAKE

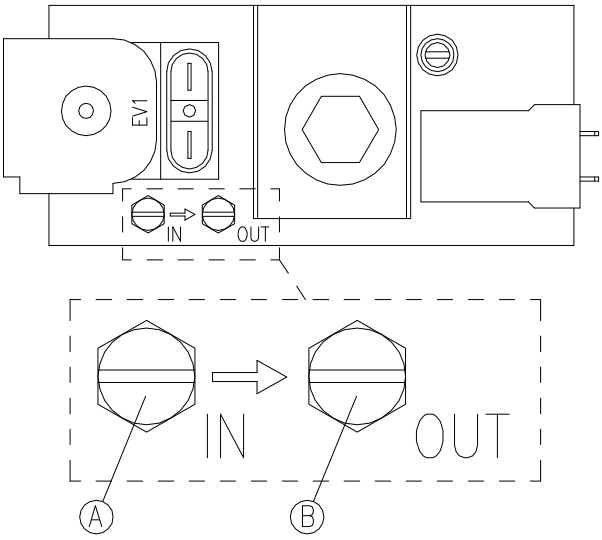

ONLY FOR THE EUROPEAN MARKET

The gas inlet pressure intake is on the gas feed pipe **(FIG.1 "A")** (See **PLANT CONNECTION**).

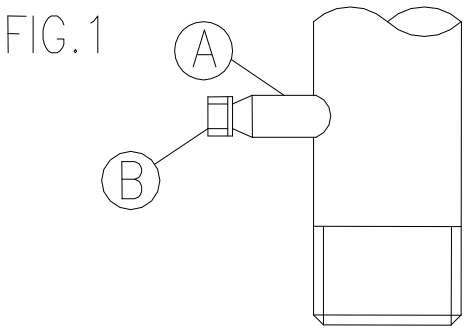

Before connecting the gauge remove the screw of the inlet pressure intake (**FIG.1 "B"**).

Connect the U manometer and measure the pressure with **device functioning**.

At the end tighten the screw of the inlet pressure intake.

8 COMMISSIONING AND TESTING

Once all the connections have been made, the appliance and the overall installation must be checked following the directions given in this manual.

CHECK IN PARTICULAR:

That the protective film has been removed from the external surfaces;
That the panels of the machine are closed correctly;
That connections have been made in accordance with the requirements and directions indicated in this manual;
That all safety requirements in current standards, statutory regulations and directives have been met;
That the power cable is not subjected to traction and is not in contact with hot surfaces;
That the water, gas and steam connections are tight and not subjected to traction.

Now proceed to light the appliance as directed in the instructions for use.

While the appliance is in use, voltage should not differ from the nominal voltage more than +/- 10%.

In the gas models:
Check that the flue gas exhaust is not clogged and that they are expelled without any hindrance.

Repeat "**CONTROL OF THE GAS INLET PRESSURE**" with the machine running.
If you have other machines connected to the main pipe of the gas, although these have to be put into operation, to perform a correct control of of the pressure of inlet gas.

☞	**The test report must be completed in full and submitted to the customer who should then sign in acceptance. With effect from this moment, the appliance is covered by the manufacturer's warranty**

Attention if the display shows:

	The safety thermostat of the equipment has intervened. The equipment is switched off.	The safety thermostat can be disarmed during transport without any anomalies, or with temperatures close to 0 ° C **Disconnect the machine from the power supply.** Remove the lower right control panel and reset the thermostat, pressing firmly on the red thermostat button. In case of new thermostat intervention **contact the assistance service.**

9 USING THE MACHINE

10 TOUCH SCREEN

1-On-off switch

2- 7" TFT resistive display

3- Keypad for movements (mixer, pan)

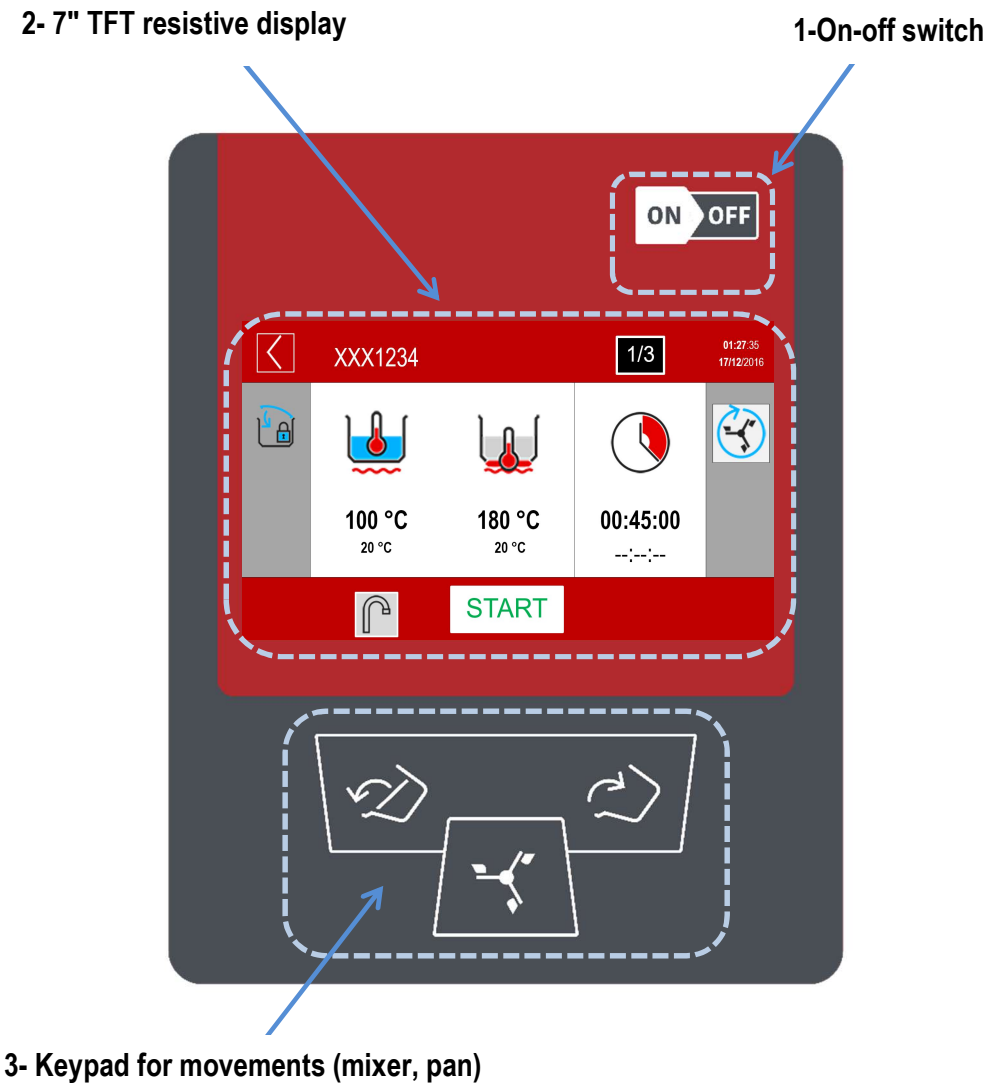

11 MAIN MENU

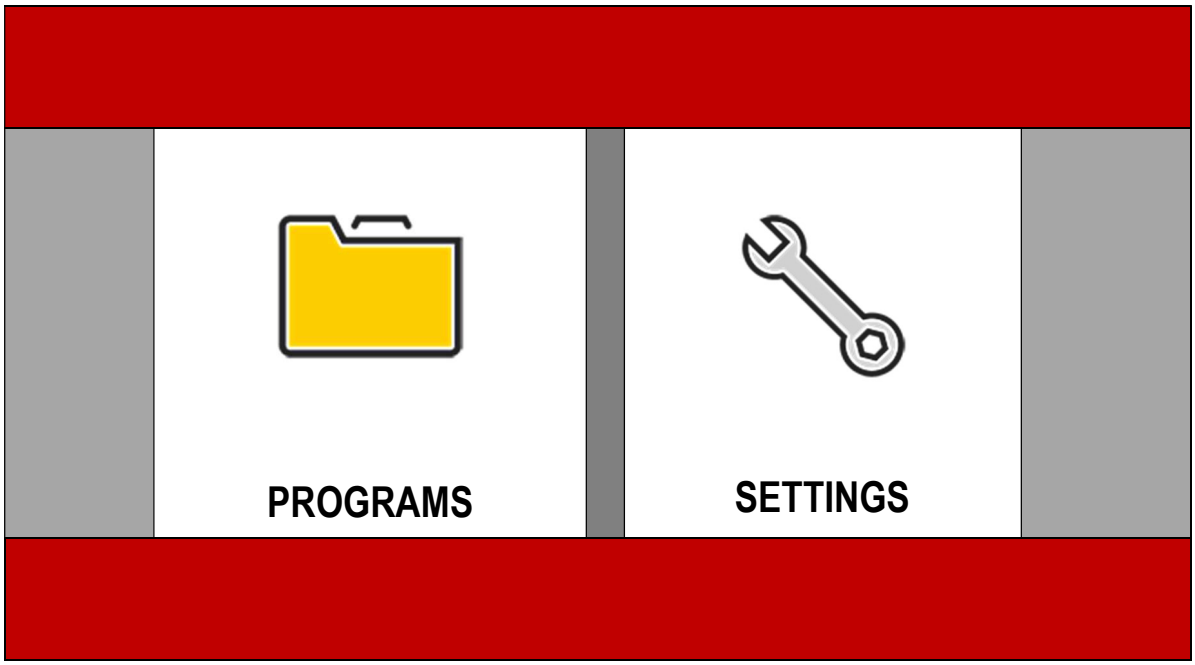

PROGRAMS

- Setting manual cooking parameters
- Carrying out manual cooking
- Running cooking programs

SETTINGS

Appliance setting-user;

- creating-editing cooking programs
- language
- date-time
- firmware update
- colors
- EXPORT (HACCP data)

Appliance setting - installer/technical assistant;

- TEST I/O
- Parameter setting (unit of measurement)
- Import database

12 SETTINGS MENU

PROGRAMS	• Creating-editing cooking programs
LANGUAGES	• Language setting
FIRMWARE	• Firmware update (from USB)
DATE-HOUR	• Current Date and Time setting

TEST I/0	• Test I/O board (only with password)
PARAMETERS	• Parameter setting (only with password)
COLORS	• Screen colour setting
IMPORT	• Import database (parameters, cooking, languages, programs) only with password.

EXPORT	• Export (HACCP data).Read the instruction manual dedicated to HACCP.

13 PROGRAMS MENU

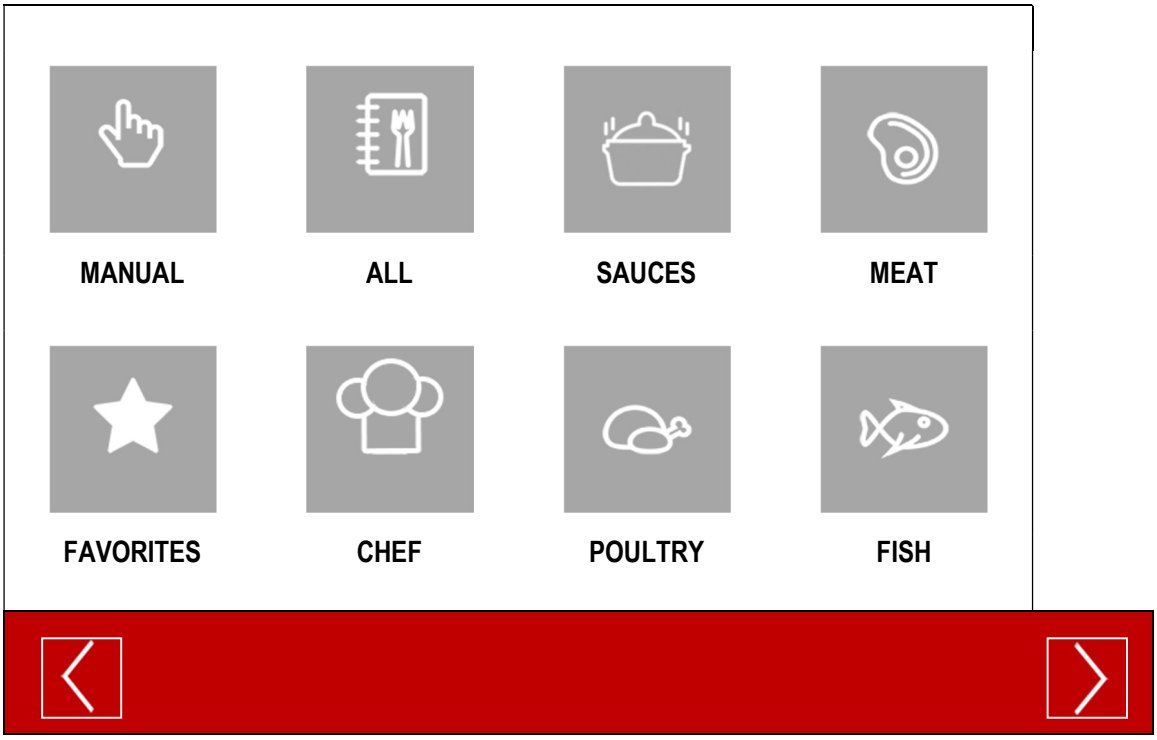

MANUAL	• Setting manual cooking parameters • Carrying out manual cooking
ALL FAVORITES MEAT ETC	• Running cooking programs

14 COOKING LAYOUT

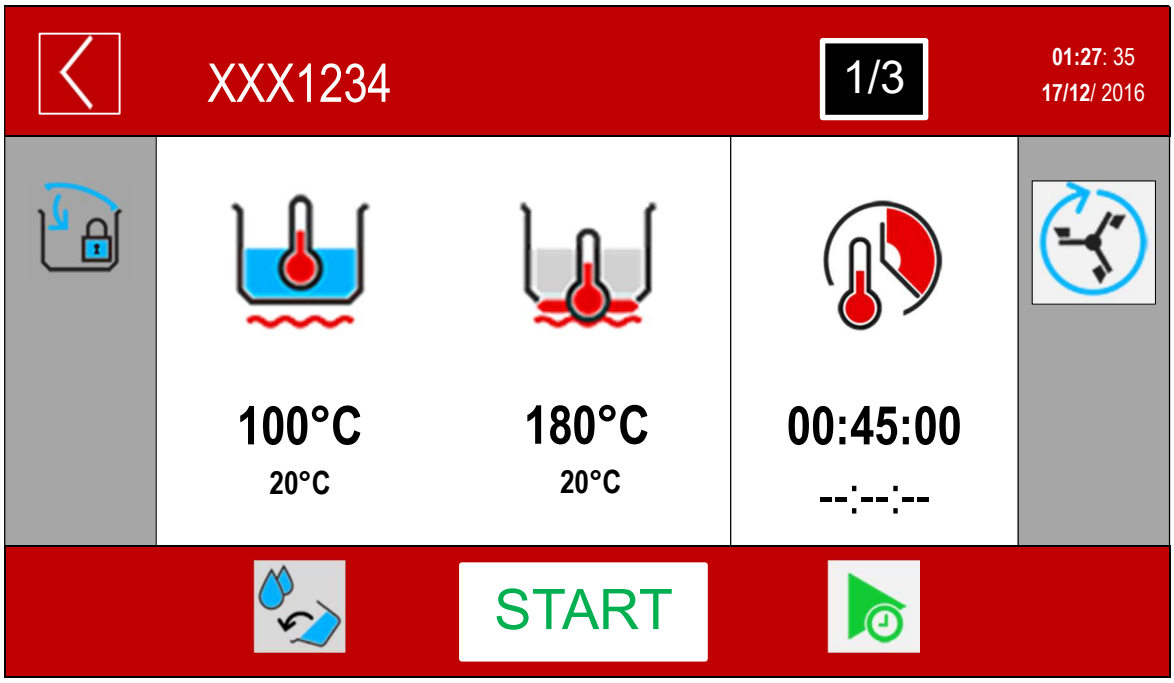

STATUS BAR

↓ COOKING AREA

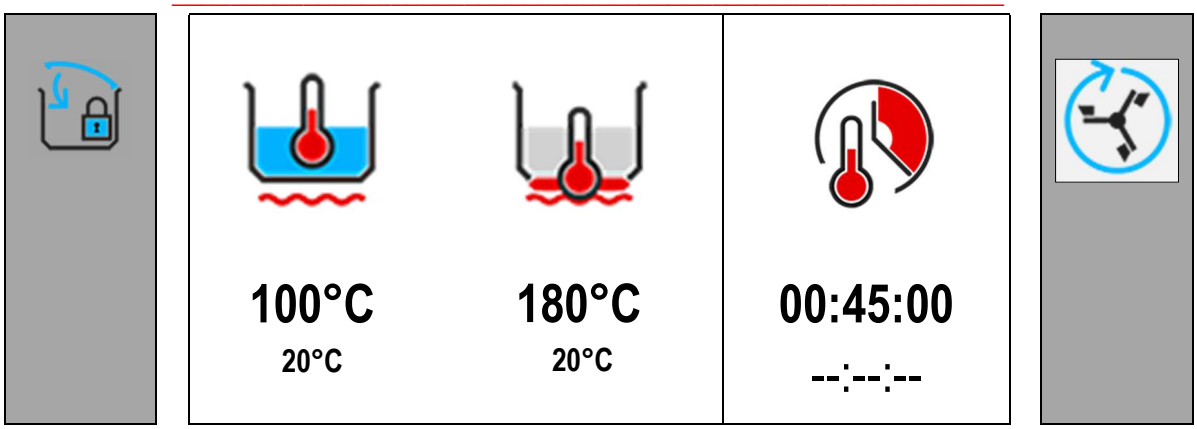

↑ MESSAGE COLUMN

FUNCTION COLUMN ↑

FUNCTION BAR

14.1 STATUS BAR

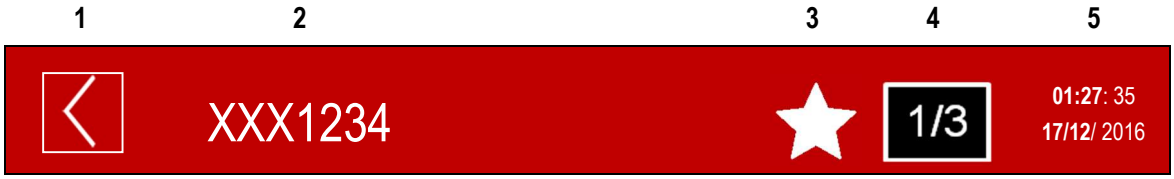

1

	STAND-BY/RETURN KEY; 3 sec → HOME

↓

	COOKING/PROGRAM IN PROGRESS.

↓

	COOKING/PROGRAM IN PROGRESS (PAUSED) AWAITING ACTION.

2

XXX1234	Name of cooking program selected

3

	PROGRAM IN THE LIST OF FAVOURITES (not present in manual cooking)

4

1/3	PROGRAM PHASE IN PROGRESS (not present in manual cooking)

5

01:27: 35 17/12/ 2016	CURRENT TIME AND DATE

14.2 COOKING AREA

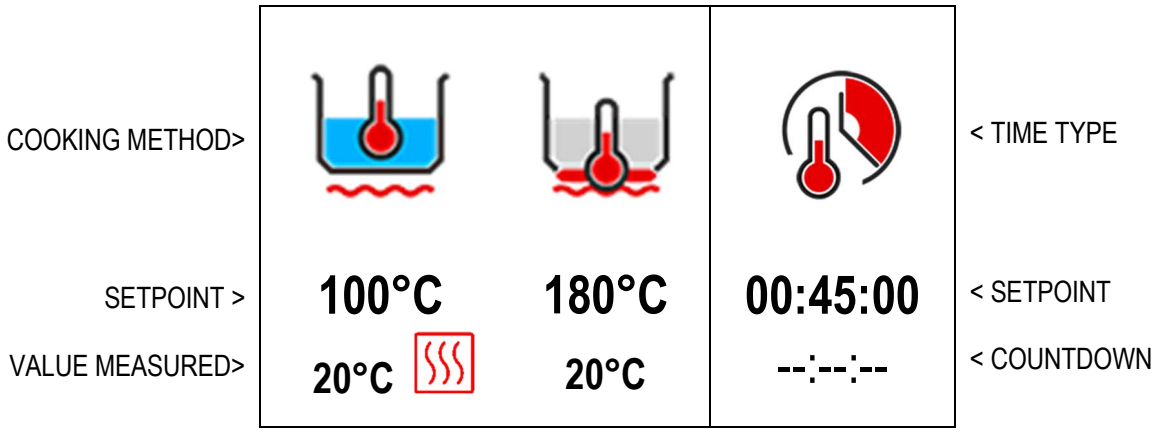

	• HEATING IN OPERATION
	• MINIMUM HEATING
	• HEATING OFF AS SETPOINT REACHED OR FOR WAITING (L COLUMN ICONS)

14.2.1 COOKING ICONS (MEANING)

Left or central icon: main control (when the SETPOINT is reached, heating stops and **the countdown of the cooking time starts**)

↓

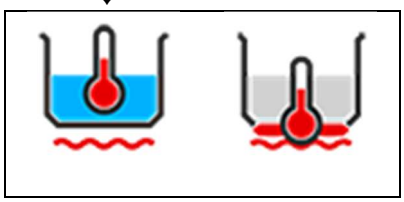

↑

Right icon: secondary control (when the SETPOINT is reached, the heating stops)

Name	Icon	Description
		Temperature at bottom
		Temperature in the pan
		Δ Temperature between bottom and main temperature

14.3 MESSAGE COLUMN (L)

INFORMATION AND REQUESTS INDICATOR L COLUMN

buzzer	Light Indicator	Icon	Description	Behaviour
no	no		Pan out of position (for cooking)	Icon present when pan out of position
no	no		Pan movement not allowed	Icon present only when you want to perform a pan movement in an unauthorised phase.
A			Safety thermostat has been triggered	Icon present when the safety thermostat has been triggered. To reset the alarm, restore the safety thermostat.
A		GAS	Insufficient gas pressure	Icon present when gas pressure switch has been triggered.
A		RESET	Gas central unit reset	Icon present due to interruption in the gas central unit

14.4 FUNCTION COLUMN (R)

Icon	Description
	Mixer ON-OFF key (also external) + mixer setting (2 sec.) ROTATION TYPE; SPEED: TIME.

14.5 FUNCTION BAR

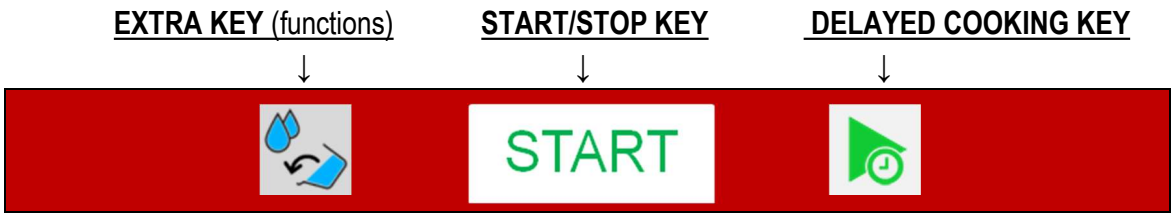

14.5.1 START-STOP KEY FOR RUNNING PROGRAMS

Attention: the START/STOP key indicates the action that will be performed by pressing the key!
The machine status is indicated by the icon on the top left

With key presence	Machine status	icon on the top left
START	**Machine in stand-by.**	

Pressing the START key starts the program and the START key becomes the STOP.

With key presence	Machine status	icon on the top left
STOP	**Program running.** or	

To avoid accidentally stopping the cooking program in progress, press the STOP key and the following screen appears:

If the STOP key has been pressed incorrectly, wait approximately 5 seconds and you return to the program in progress.

If instead you want to stop the program, slide the coloured square from the triangle to the square and release the key.

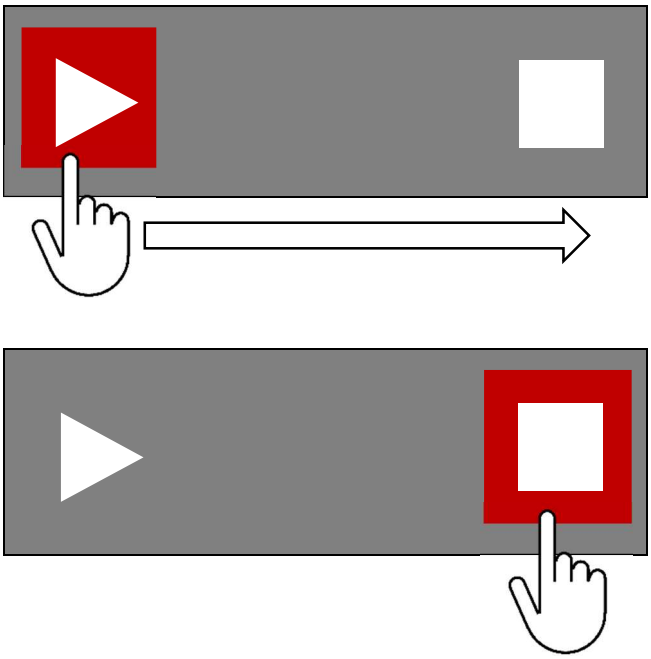

The STOP key becomes START.

Respect a 5 minute complete shuttoff period before the appliance is relighted.

14.5.2 EXTRA KEY

Pressing the key it is possible to access the following functions: H2O loading into the vessel, vessel tilting and motorized vessel discharge (optional)

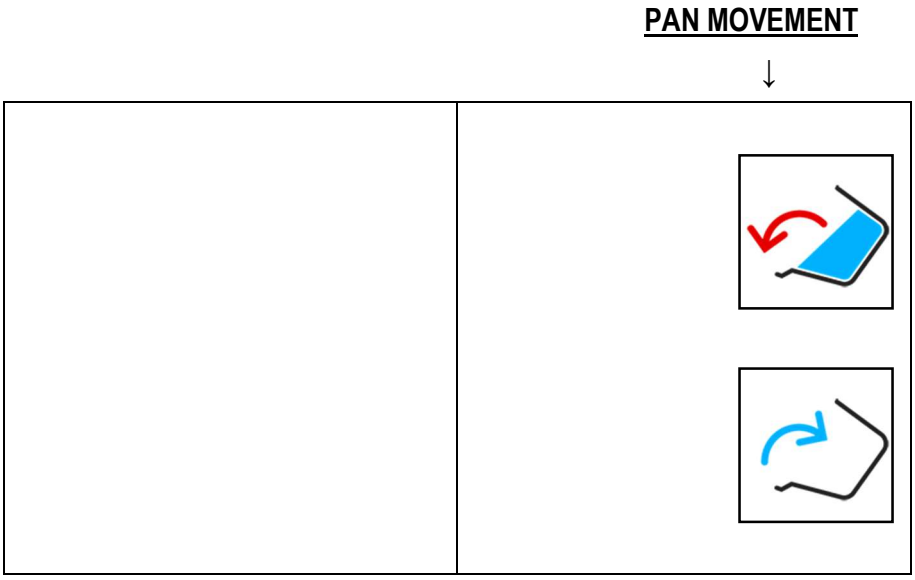

14.5.3 COOKING WITH DELAY TIMER KEY

Press the key to access the settings for cooking with delay timer.

15 COOKING METHODS IN DETAIL

15.1 COOKING

Icon	Description
	For braising that requires a temperature up to 220°C; the temperature regulation is controlled by the sensor (PT1000) located on the bottom of the pan
	For gentle cooking; the temperature regulation is controlled by the sensor (PT1000) located inside the pan, in contact with the product, and by the sensor located on the bottom of the pan.
	For gentle and slow cooking that require accurate regulation and monitoring of the temperature at the core of the product, the temperature regulation is controlled by the sensor located inside the pan by the temperature difference set between the bottom and the product.

16 SETTING SETPOINT PARAMETERS

16.1 SETTING SETPOINT VALUES WITH THE KEYPAD

The following screen appears when setting any setpoint value:

left column: parameter of which you are changing the setpoint value.
right column: keypad + cursor for changing the setpoint.

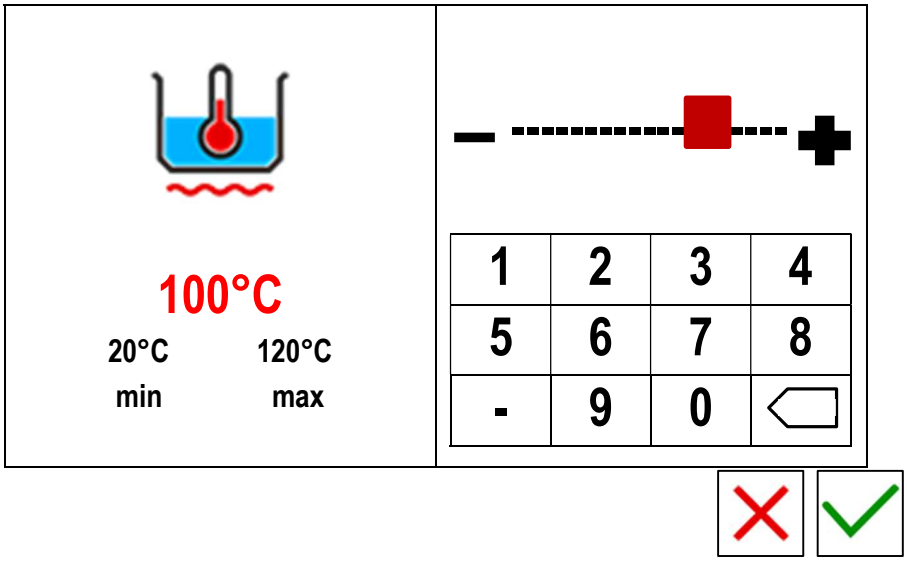

Fields in the left column have the following meanings:

100°C	RED VALUE: VALUE OF WHICH YOUR ARE CHANGING THE SET
20°C min	MINIMUM VALUE SETTABLE
120°C max	MAXIMUM VALUE SETTABLE

The values in the right column will be changed as follows:

SETTING WITH KEYPAD

TYPE THE DESIRED VALUE.
ATTENTION : THE VALUE MUST BE BETWEEN **min** AND **max**!

SETTING WITH CURSOR

QUICK SETTING	PRECISE SETTING
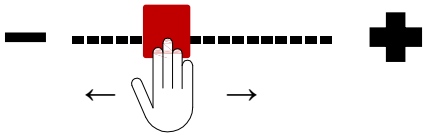	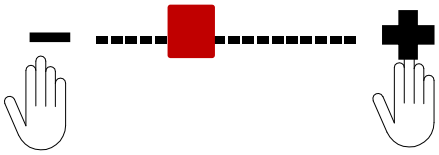

EXIT FROM SETTINGS

Exit without confirming settings key

Exit confirming settings key

17 COOKING PARAMETERS SETTING

The setting of the following parameters can only be made from the menu:

1. **PROGRAMS + MANUAL**
2. **SETTINGS + PROGRAMS**

17.1 SETTING COOKING METHOD AND TEMPERATURE

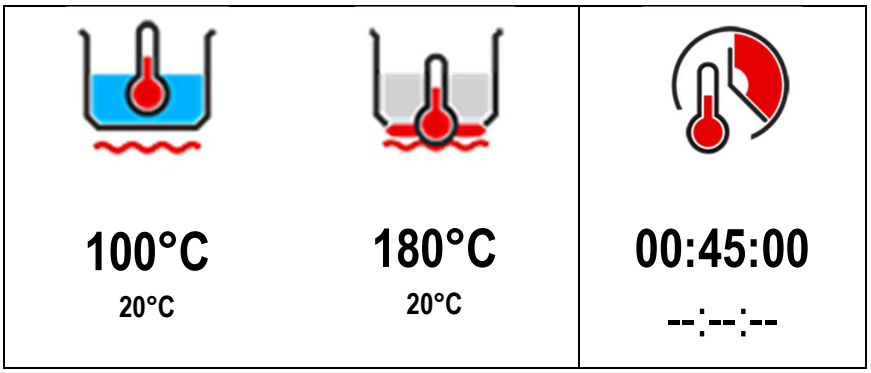

AREA HIGHLIGHTED = SELECTION/SETTINGS

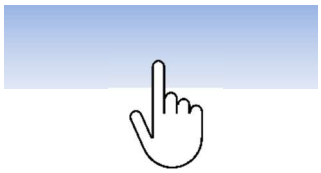

SETTING COOKING METHOD

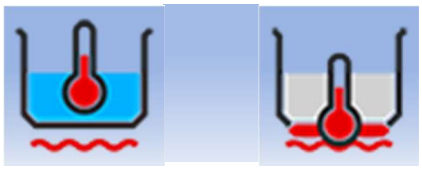	SELECTING COOKING METHOD (see Cooking methods in detail)

SETTING TEMPERATURE SETPOINT

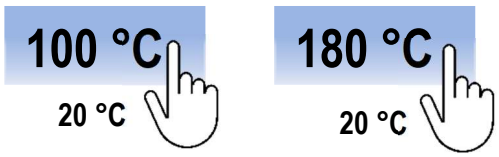	< COOKING SETPOINT (see SETPOINT) < TEMPERATURE DISPLAY

SET THE SETPOINT AS DESCRIBED IN THE CHAPTER

17.2 SETTING COOKING TIME

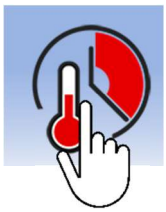	SELECTING COOKING TIME
00:45:00 --:--:--	< COOKING TIME SETPOINT (see SETPOINT) < COOKING TIME COUNTDOWN

SELECTING COOKING TIME

Cooking time (at setpoint °C) | Cooking time (immediate) | Infinite time

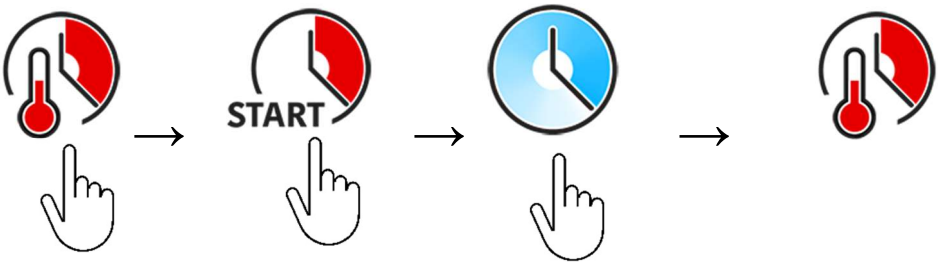

ATTENTION: WHEN SELECTING THE INFINITE TIME, PRESS THE KEY INDICATED BELOW TO TERMINATE THE PROGRAM IN PROGRESS.

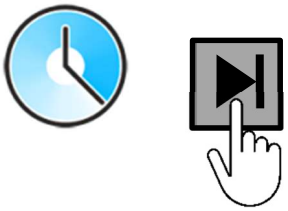 --:--:-- 00:04:31	**NOTE:** The time elapsed since the beginning of the phase is indicated on the bottom row.

SETTING COOKING TIME SETPOINT

Only with

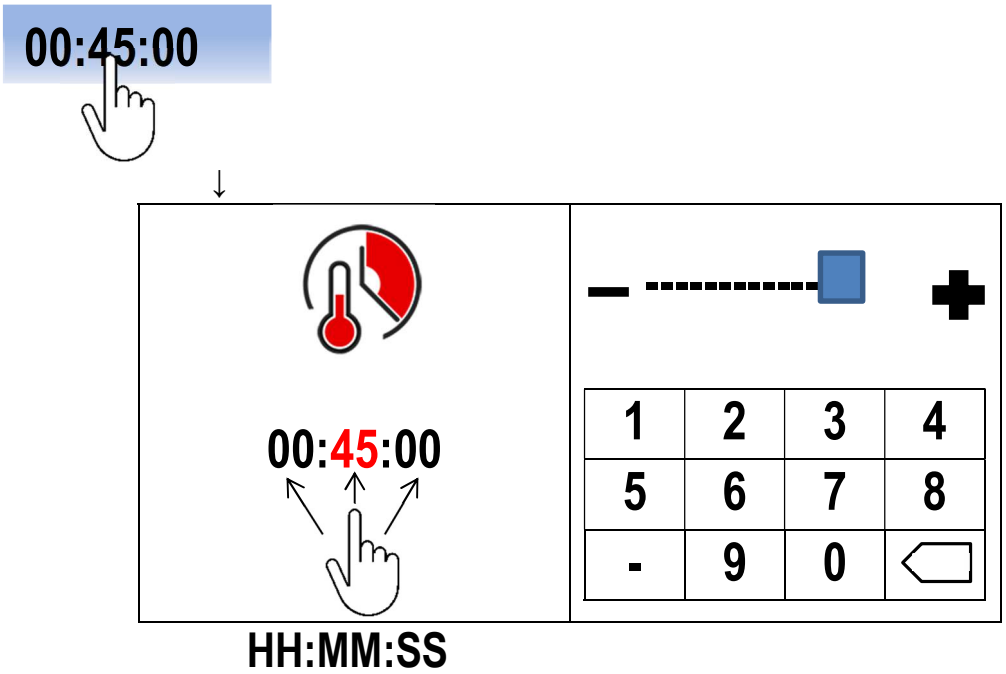

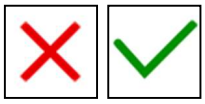

HH: 99 max; MM: 59 max; SS: 59 max

18 CREATING PROGRAMS (MULTI-PHASE)

FROM SETTINGS> PROGRAMS> NEW

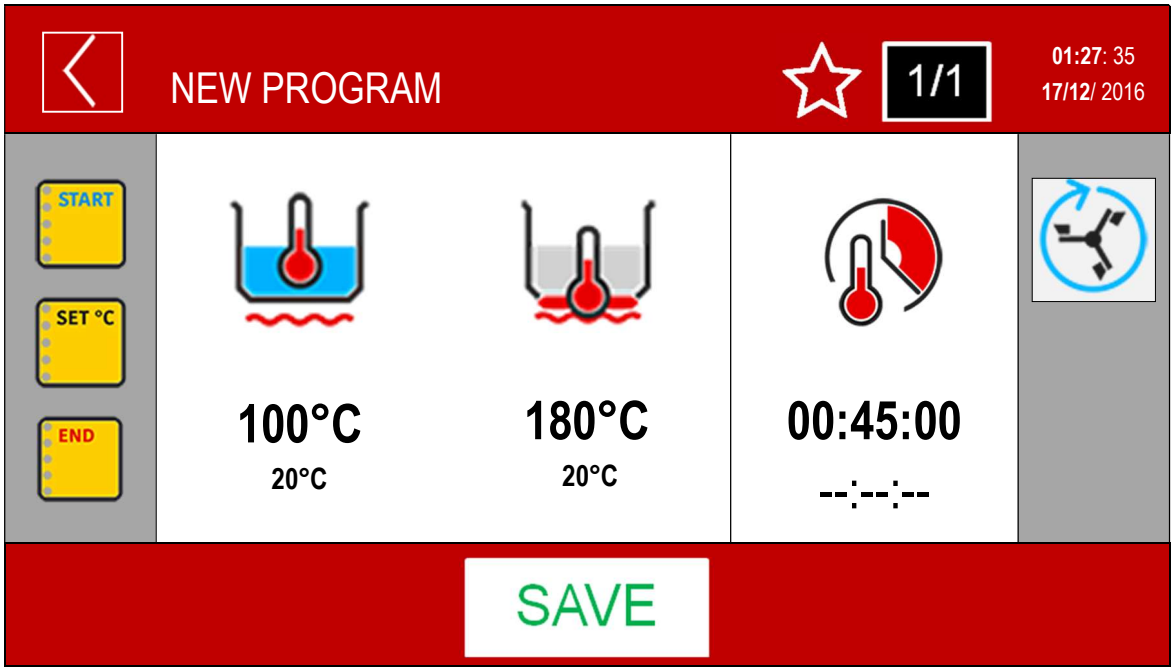

A PROGRAM CAN CONSIST OF 20 PHASES.

THE PARAMETERS ARE CONSTANT WITHIN EACH PHASE. IF A SINGLE VALUE CHANGES, YOU NEED TO CREATE A NEW PHASE!

THE CREATION OF THE PHASE CONSISTS OF ENTERING THE COOKING METHOD, COOKING TIMES, MIXER FUNCTIONS AND WALL HEATING.

IT IS ALSO POSSIBLE TO ENTER (IN EVERY PHASE) 3 MESSAGES PRESENT IN THE LEFT COLUMN. (SEE MESSAGE SETTINGS)

18.1 CREATING/DELETING PHASES

ONCE THE PARAMETERS OF PHASE 1 ARE SET, YOU CAN THEN ADD PHASE 2:

AFTER HAVING ADDED AND SET THE PARAMETERS OF PHASE 2, PRESSING ON THE PHASE/PHASE FIELD DISPLAYS THE FOLLOWING SCREEN:

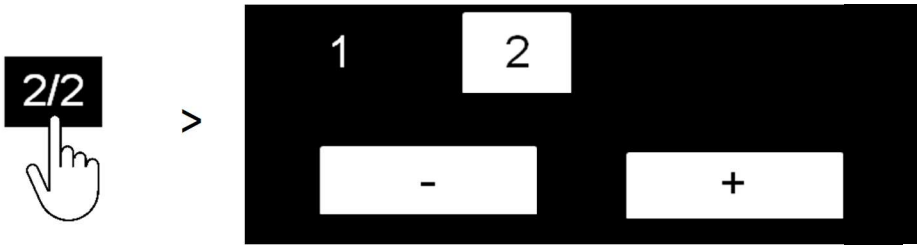

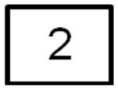

SHOWS THE CURRENT PHASE

RETURNS TO PHASE 1 SETTINGS

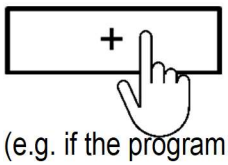

ENTERS A NEW PHASE AFTER THE HIGHLIGHTED PHASE

(e.g. if the program consists of 2 phases and I want to insert a phase between 1 and 2, I have to select phase 1 and press the + key, phase 2 becomes 3 and you need to set the parameters for phase 2).

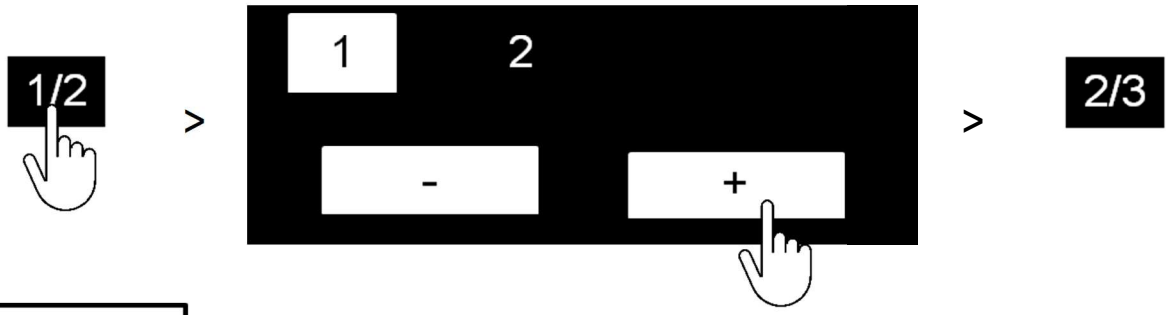

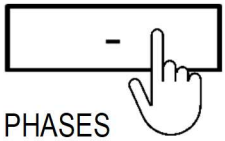

DELETES THE HIGHLIGHTED PHASE AND RENUMBERS THE FOLLOWING PHASES

(e.g. if the program consists of 3 phases and phase 2 is deleted, phase 3 becomes 2)

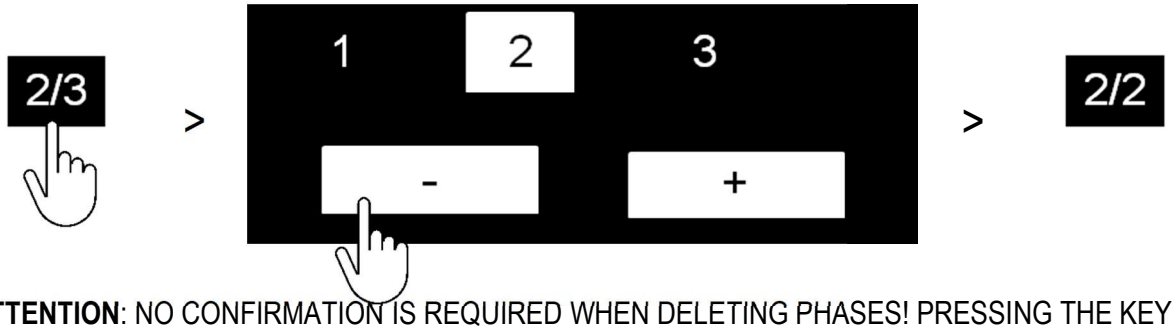

ATTENTION: NO CONFIRMATION IS REQUIRED WHEN DELETING PHASES! PRESSING THE KEY 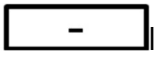

IMMEDIATELY DELETES THE CURRENT PHASE!

PHASE 1 CAN NOT BE DELETED!

18.2 MESSAGE SETTINGS

The following screen appears when selecting the message icon:

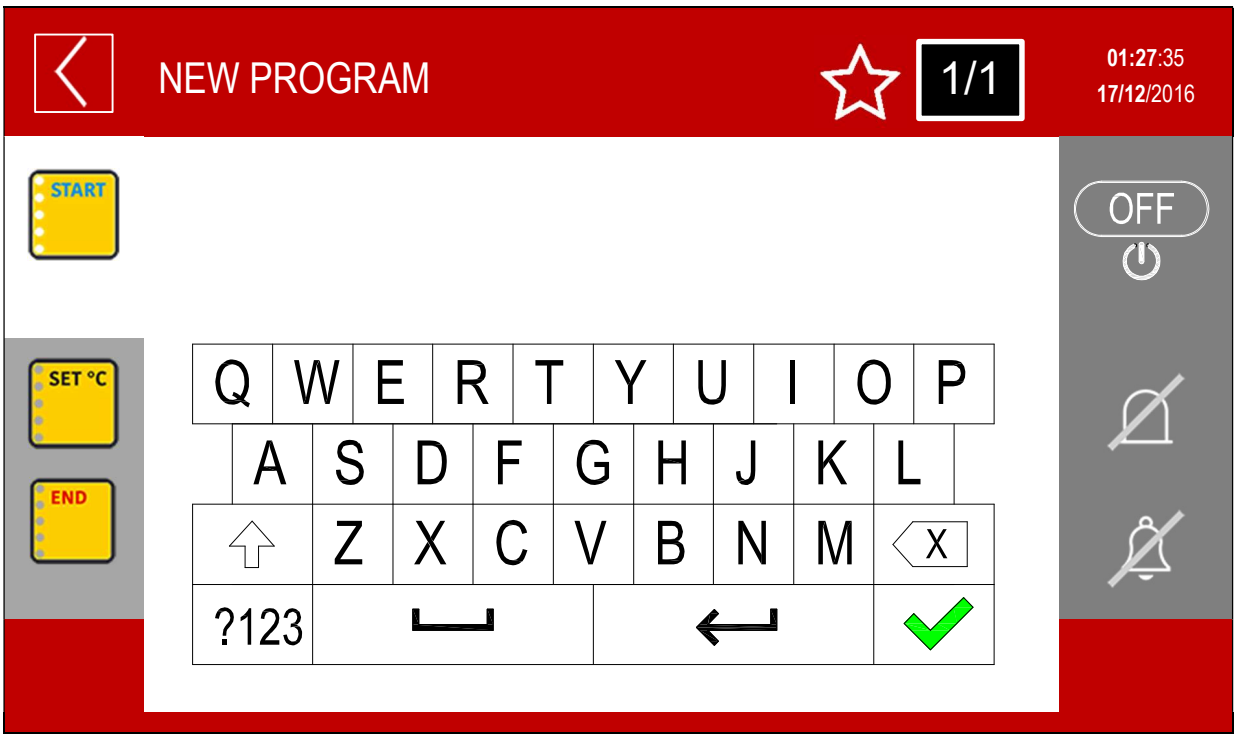

MESSAGE SELECTION KEYS

MESSAGE SETTINGS KEYS

MESSAGE WRITING AREA

MESSAGE SELECTION KEYS

Icon	Description
START	MESSAGE AT THE BEGINNING OF THE PHASE
SET °C	MESSAGE ON REACHING SETPOINT
END	MESSAGE AT THE END OF THE PHASE

MESSAGE SETTINGS KEYS

THE KEY ON THE TOP RIGHT TAKES ON THE FOLLOWING FUNCTIONS SPECIFIED IN RELATION TO THE SELECTED MESSAGE (START; SET °C: END)

START	**START MESSAGE**
Key	Behaviour when program running
OFF	• No message appears
ON	• The message appears • The heating starts at "ON" • If the time is set START, the countdown begins
ON	• The message appears • The heating stays "OFF" until you reply to the message • If the time is set START, the countdown begins when you reply to the message.
SET °C	**MESSAGE ON REACHING SETPOINT**
Key	Behaviour when program running
OFF	• No message appears
ON	• The message appears • Heating keeps the SETPOINT • If the time is set, the countdown begins
ON	• The message appears • Heating keeps the SETPOINT • If the time is set, the countdown begins when you reply to the message.
END	**END OF PHASE MESSAGE**
Key	Behaviour when program running
OFF	• No message appears
ON	• The message appears • Heating keeps the SETPOINT • When the countdown has ended, it is possible to increase the cooking time or move on to the next phase.

ATTENTION : IF THE MESSAGE IS SET TO OFF, ALL THE SETTINGS DESCRIBED BELOW (FLASHING, BUZZER, AND TEXT) **WILL NOT APPEAR** WHEN THE PROGRAM IS RUNNING!

THE FOLLOWING KEYS HAVE THE SAME FUNCTIONS FOR ALL MESSAGES (START; SET °C; END)

Flashing (optional)

Right key	Behaviour when program running
	• Flashing not enabled
	• When the message appears, the flashing light also switches on. (message frame flashing or external flashing optional)

Buzzer

Right key	Behaviour when program running
	• Buzzer not enabled
	• When the message appears, the buzzer sounds

ENTERING MESSAGE TEXT

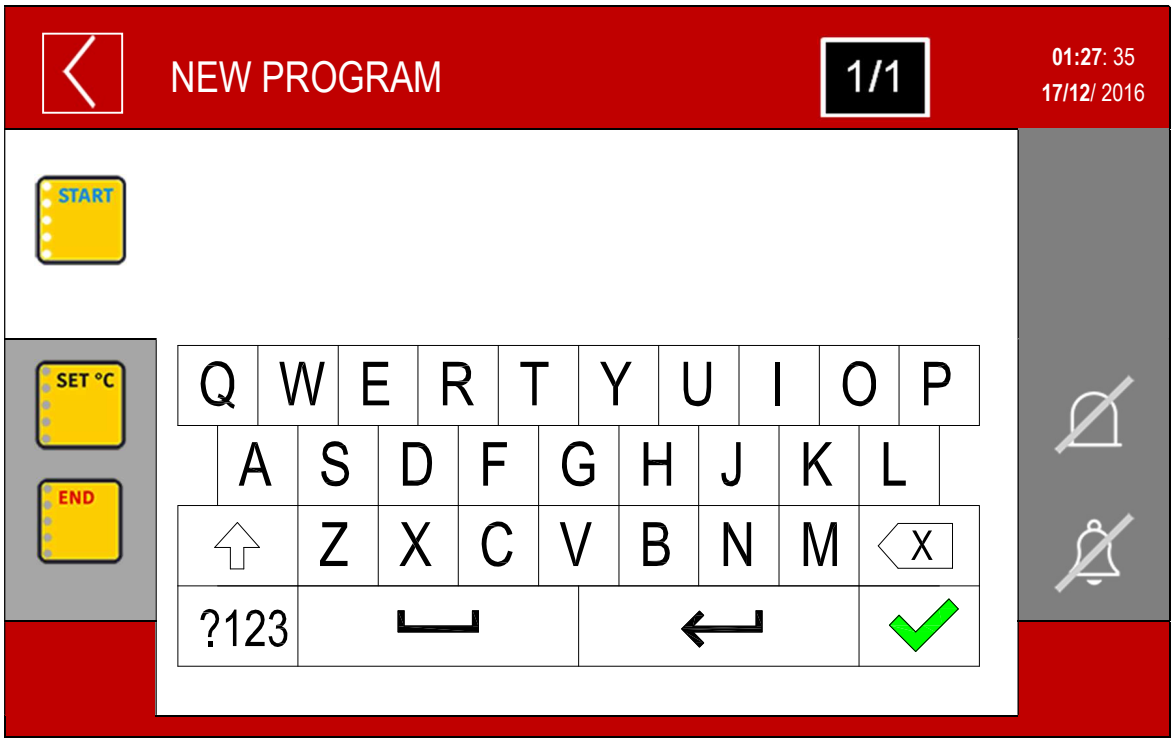

USE THE KEYPAD TO ENTER A DESCRIPTIVE TEXT (MAX 200 CHARACTERS) AND CONFIRM WITH THE KEY ✓ .

AFTER HAVING SET ALL THE VARIABLES WITHIN THE MESSAGE, THE RELATED MESSAGE ICON WILL SHOW WITHIN ALL THE SYMBOLS THAT SUMMARISE THE SETTINGS OF THE MESSAGE ITSELF.

TEXT PRESENT>

BUZZER ENABLED>

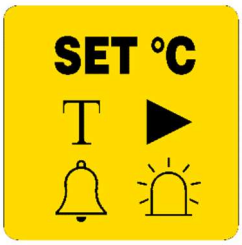

< ACTION TYPE

< FLASHING ENABLED

ATTENTION: IF THE MESSAGE IS IN "OFF", IT APPEARS ON A GREY BACKGROUND.

ANY SETTINGS (TEXT, BUZZER, FLASHING) WILL NOT BE CANCELLED FROM MESSAGE SETTING!

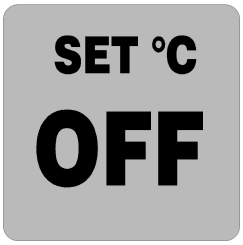

18.3 SAVING A PROGRAM

IF YOU WANT TO ADD THE PROGRAM TO THE LIST OF FAVOURITES, PRESS THE "STAR" SYMBOL.

- Program NOT added to favourites

- Program added to favourites

PRESS THE "SAVE" BUTTON

THE KEYPAD APPEARS TO ENTER THE PROGRAM NAME.

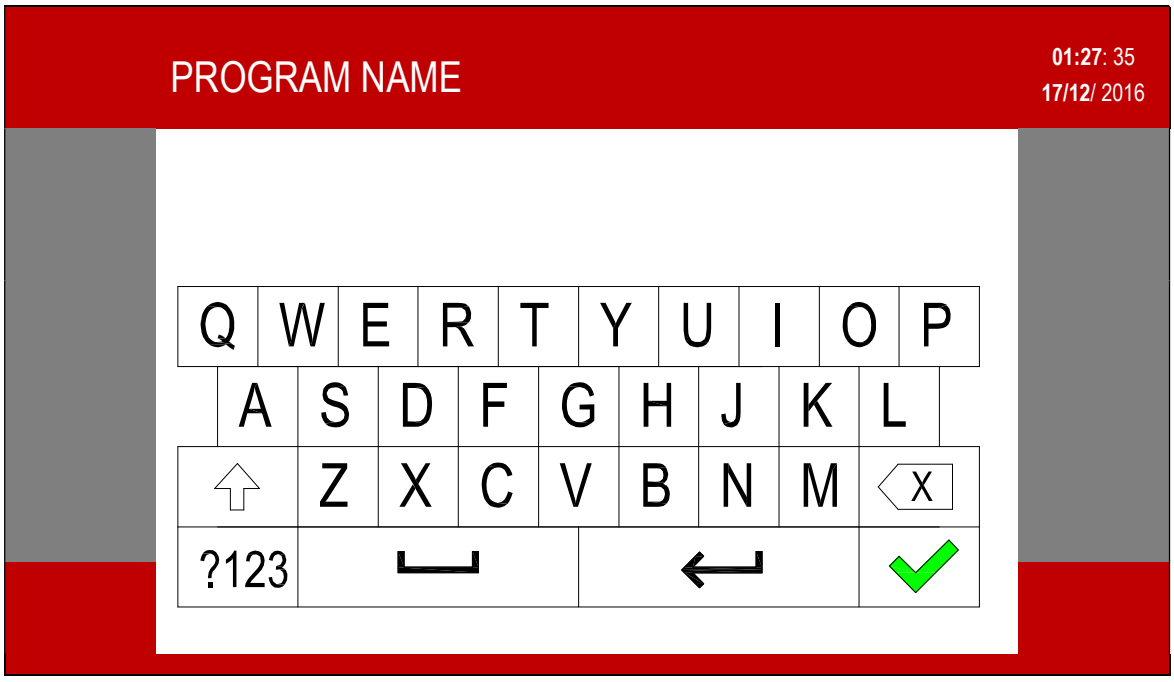

ENTER THE PROGRAM NAME AND CONFIRM WITH THE KEY ✓ .

ATTENTION : THE PROGRAM DOES NOT PERFORM A CHECK TO SEE IF A PROGRAM WITH THE SAME NAME ALREADY EXISTS. 2 PROGRAMS WILL BE SAVED WITH THE SAME NAME, WITH HE POSSIBILITY OF RENAMING THEM. (SEE EDITING PROGRAMS)

THE SCREEN APPEARS FOR LINKING THE PROGRAM TO A CATEGORY

18.4 EDIT/ COPY/ RENAME PROGRAM

- FROM SETTINGS> PROGRAMS
- SELECT THE CATEGORY OF THE PROGRAM OR ALL
- SELECT THE PROGRAM THAT YOU WANT TO EDIT.

REFER TO "CREATING MULTIPHASE PROGRAMS" FOR EDITING

ONCE CHANGES HAVE BEEN MADE, PRESS THE SAVE KEY AND THE FOLLOWING SCREEN APPEARS:

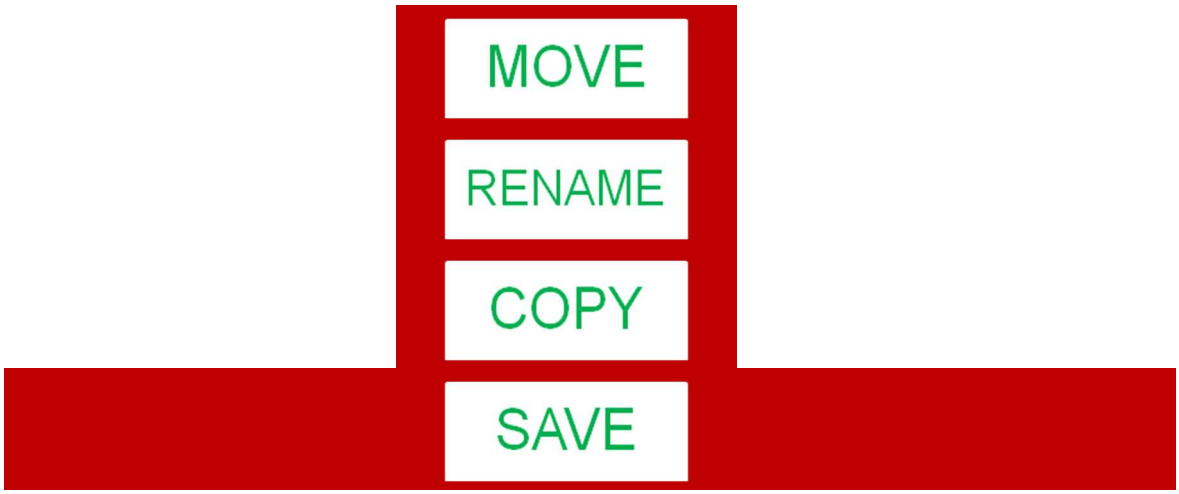

SAVE: SAVES THE PROGRAM (NO FURTHER REQUEST)

COPY: A NEW PROGRAM IS CREATED (GIVE THE NAME TO THE PROGRAM AND THE CATEGORY)

RENAME: GIVES A NEW NAME TO THE PROGRAM (SAVING THE CHANGES MADE)

MOVE: MOVES THE PROGRAM TO ANOTHER GROUP (PRESS THE SAVE KEY TO CONFIRM)

18.5 DELETING A PROGRAM

- FROM SETTINGS> PROGRAMS
- SELECT THE CATEGORY OF THE PROGRAM OR ALL
- SELECT THE PROGRAM YOU WANT TO DELETE BY PRESSING ON THE NAME OF THE PROGRAM FOR ABOUT 2 SEC.
- A POP-UP WILL BE APPEAR TO CONFIRM PROGRAM DELETION

CONFIRM DELETION

CANCEL DELETION

19 RUNNING A PROGRAM/MANUAL COOKING

19.1 RUNNING A PROGRAM/MANUAL COOKING

FROM PROGRAMS> MANUAL

SET ALL THE COOKING PARAMETERS

PRESS THE START KEY

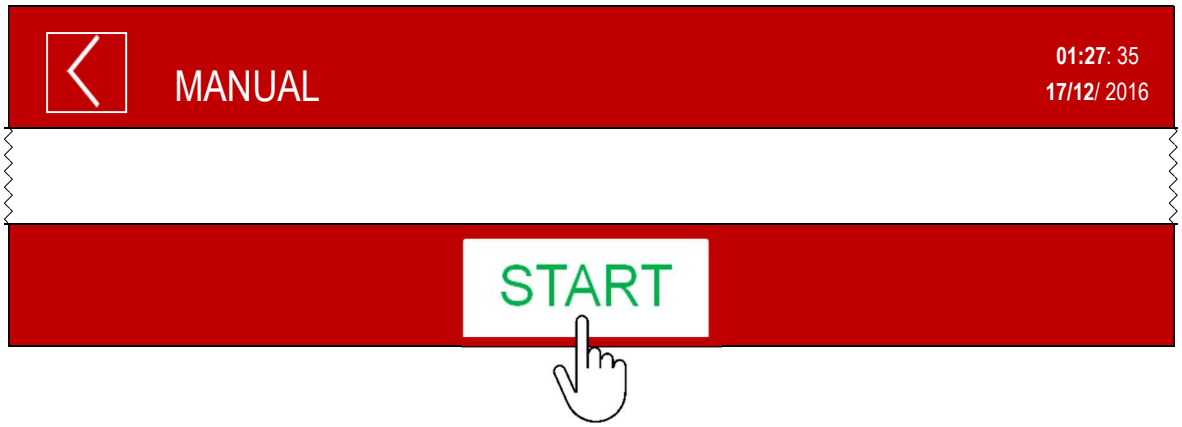

THE SCREEN BECOMES

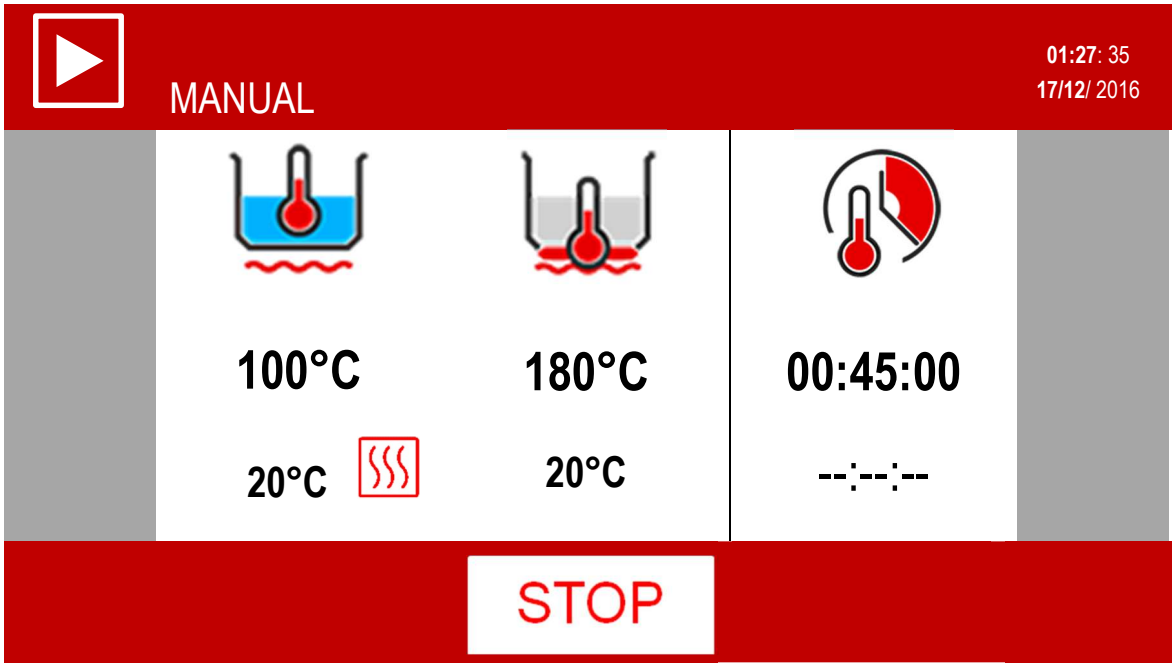

A SYMBOL APPEARS ON THE SIDE OF THE VALUE READ WITH THE FOLLOWING MEANINGS:

	• HEATING IN OPERATION
	• MINIMUM HEATING
	• HEATING OFF AS SETPOINT REACHED OR FOR WAITING (L COLUMN ICONS)

WHEN RUNNING THE PROGRAM YOU CAN CHANGE THE TEMPERATURE AND TIME SETPOINT BY PRESSING IN THE FIELD CORRESPONDING TO THE SET VALUES FOR ABOUT 2 sec. .

IT IS NOT POSSIBLE TO CHANGE THE COOKING METHOD AND TIME!!

19.2 END OF COOKING

EITHER WAIT UNTIL END OF COOKING TIME (IF TIME SET) OR PRESS THE STOP KEY.

IF THE SET TIME IS (INFINITE), COOKING/HEATING CAN ONLY BE ENDED BY PRESSING THE STOP KEY!

20 RUNNING PROGRAMS (MULTI-PHASE)

20.1 RUNNING PROGRAMS (MULTI-PHASE)

FROM PROGRAMS> SELECT THE PROGRAM THAT YOU WANT TO RUN FROM THE FOLDER: ALL; CATEGORY (MEAT, SAUCES, ETC) OR FAVOURITES

PRESS THE START KEY

NOTE 1)

WHEN RUNNING THE PROGRAM YOU CAN CHANGE THE TEMPERATURE AND TIME SETPOINT (ONLY IN THE PHASE IN WHICH THE PROGRAM IS CURRENTLY RUNNING) BY PRESSING IN THE FIELD CORRESPONDING TO THE SET VALUES FOR ABOUT 2 sec. .

IT IS NOT POSSIBLE TO CHANGE THE COOKING METHOD AND TIME!!

NOTE 2)

YOU CAN MOVE ON TO THE NEXT PHASE (WITHOUT WAITING FOR THE PHASE IN PROGRESS TO FINISH) BY PRESSING THE "PROGRAM PHASE" FIELD.

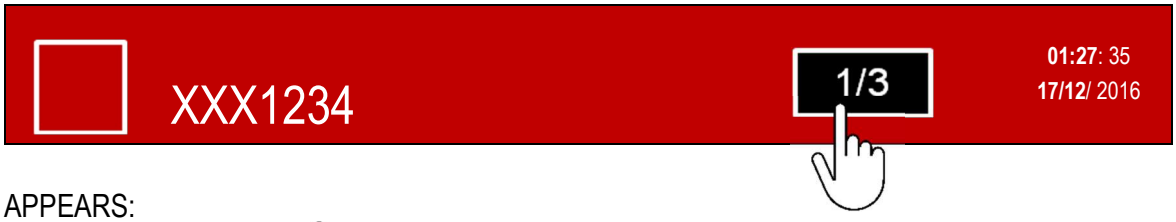

APPEARS:

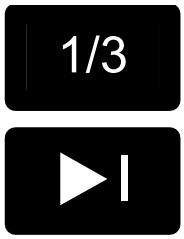

x1 IT RETURNS TO THE PHASE IN PROGRESS

x2 IT PASSES TO THE NEXT PHASE.
ATTENTION: IF IT IS THE LAST PHASE, THE PROGRAM FINISHES!

NOTE 3)

IF A PROGRAM HAS A PHASE SET WITH AN INFINITE TIME, THE MOVE TO THE NEXT STAGE IS ACHIEVED BY PRESSING THE KEY TO THE SIDE OF THE TIME SYMBOL

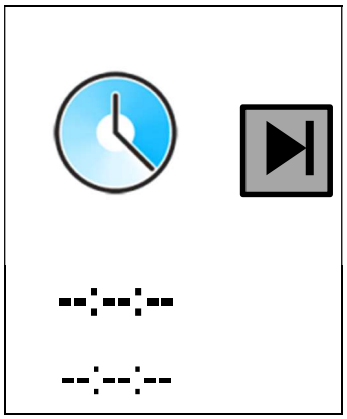

Press the key to move on to the next phase

The time elapsed since the beginning of the phase is shown on the bottom row.

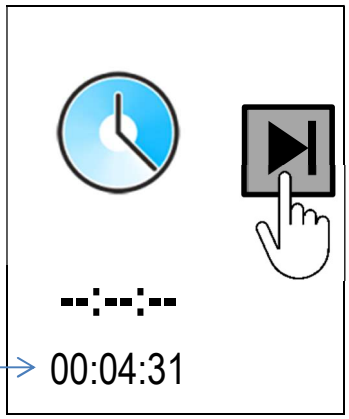

NOTE 4)

IF YOU ARE RUNNING A PROGRAM WITH ACTIVE MESSAGES, WHEN THE MESSAGE APPEARS, THE OPERATOR:

CAN PRESS THE BUZZER OR TURN OFF THE FLASHING (IF PRESENT IN THE MESSAGE)

MUST CONFIRM THE OPERATION REQUESTED TO CONTINUE WITH THE PHASE OR TO MOVE ON TO THE NEXT PHASE.

NOTE 5)

IF THE PROGRAM HAS THE ACTIVE MESSAGE "**END**" AT THE END OF THE COOKING TIME, THE FOLLOWING MESSAGE APPEARS: END THE PHASE?

IF YOU PRESS **"YES"** , IT MOVES ON TO THE NEXT PHASE;

IF YOU PRESS **"NO"**, THE FOLLOWING KEYS APPEAR:

	key to move on to the next phase
00:45:00 00:00:11	key to increase the time (+ 1 minute each time the key is pressed)

The bottom row indicates the time passed since the cooking time elapsed.

AT THIS POINT IT IS NO LONGER POSSIBLE TO CHANGE THE TIME SETPOINT!

IN ORDER TO EXTEND THE COOKING:

- EITHER YOU CHECK THE TIME PASSED ON THE LOWER ROW AND GO TO THE NEXT STEP BY PRESSING THE KEY ABOVE;
- OR PRESS THE +1 KEY (THE NUMBER OF TIMES CORRESPONDING TO THE DESIRED NUMBER OF MINUTES). THE COUNTDOWN WILL BE DISPLAYED ON THE BOTTOM ROW AND THE KEY ABOVE WILL DISAPPEAR. IT IS NOT POSSIBLE TO DECREASE THE MINUTES SET. IF YOU MAKE A MISTAKE AND SET TOO MANY MINUTES, YOU HAVE TO MOVE ON TO THE NEXT PHASE AS DESCRIBED IN NOTE 2.

ONCE THE TIME HAS RUN OUT, THE FOLLOWING MESSAGE WILL REAPPEAR: END THE PHASE?

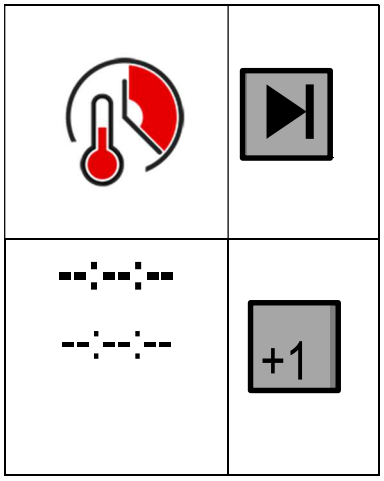

20.2 END OF PROGRAM

EITHER WAIT FOR THE END OF PROGRAM OR PRESS THE STOP KEY (+ CONFIRM).

IF THE SET TIME IS (INFINITE) , COOKING/HEATING CAN ONLY BE ENDED BY PRESSING THE STOP KEY!

21 COOKING WITH DELAY TIMER

After having chosen the program to run,

press the button to access the settings for cooking with delay timer.

It is possible to set the delayed start in two ways:

Top row:

setting the start date and time: set the hour and minutes, and, if necessary, the day (with a maximum of 7 days in advance).

Bottom row:

setting delayed start: starting from the current time and date, set the hour and minutes, and if applicable the day(s) delayed (with a maximum of 7 days in advance).

In automatic, when setting in one mode or the other, the other row will also be updated. (if the start time and date are set, the delayed time will be updated, and vice versa).

To exit without saving, press the key .

Press the START key to confirm.

The display shows the time and date when it will start, and the bottom row shows the time remaining until it starts.

To cancel the delayed start, press the STOP button.

Attention: check that there are no lights in the left column (e.g. pan out of position), otherwise the cooking with delay timer will NOT be carried out.

22 USING THE MIXER

22.1 MIXER SETTINGS

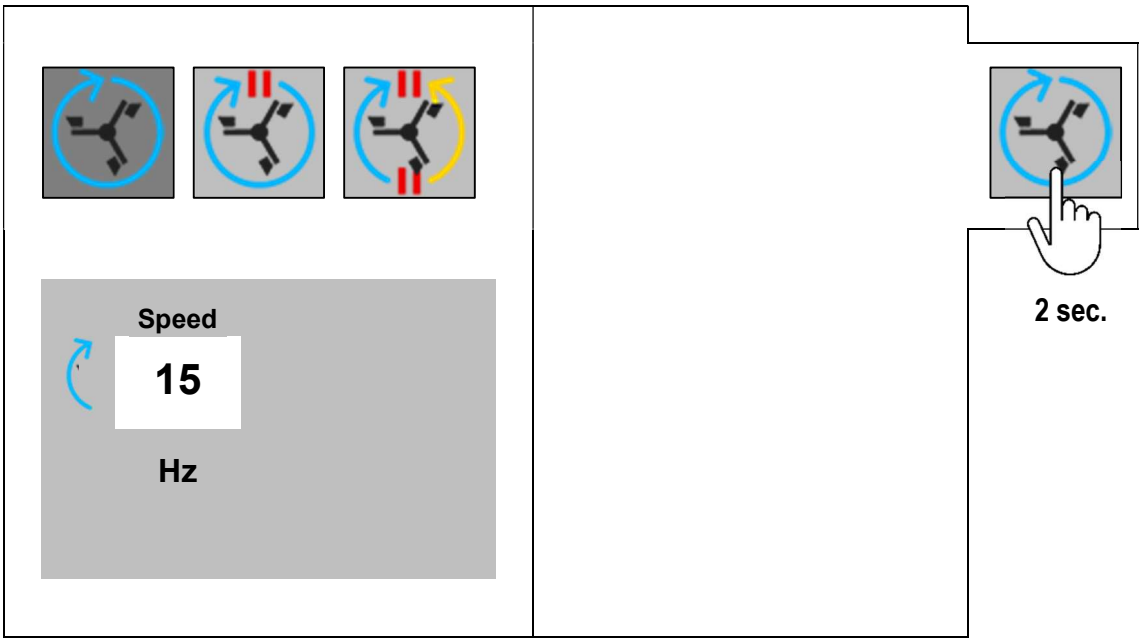

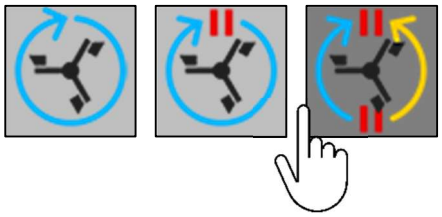

Select the type of mixing

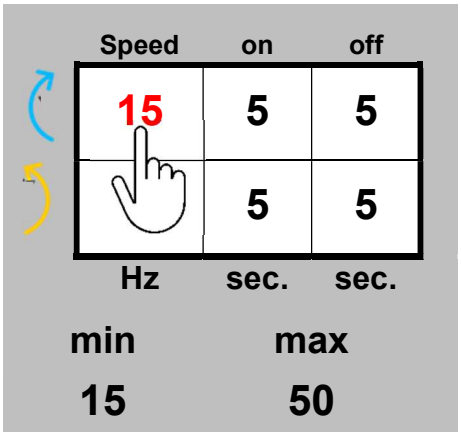

Select the field to edit.

Set the desired values with the keypad.

Attention: When creating multi-phase programs, if you do NOT want to use the mixer in a certain phase, you need to press key select mixing type (in dark grey), so that all the keys have a light grey background (the area for setting values also disappears: speed; on; etc).

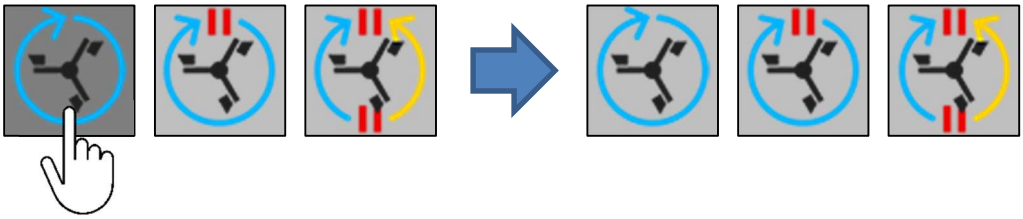

22.2 STARTING THE MIXER (MANUAL COOKING PROGRAM)

The mixer can be started or switched off by pressing the internal key or the external key.

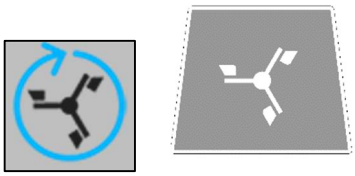

To change the mixing type and speed refer to the "MIXER SETTINGS" paragraph.

Attention:
When opening the lid (PRI..M) the mixer automatically operates at minimum speed and only rotates clockwise. When the lid is closed, the mixer returns to the set values.

When the pan is tilted, the mixer stops automatically. To facilitate product unloading, the mixer can be operated (only at minimum speed and in a clockwise rotation) by keeping the key pressed

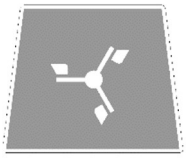

When the pan returns to the horizontal position, the mixer MUST be restarted!

22.3 STARTING THE MIXER (MULTI-PHASE PROGRAM)

If the selected program involves the operation of the mixer, after pressing the START key, a message will appear with a countdown for mixer start up.

If you do NOT want to start the mixer, press the "STOP MIXER" key. If you do want to use it, simple wait for the time to run out.

Attention:
This message will appear in the program every time there is a phase with NO active mixer, followed by a phase with active mixer.

To change the mixing type and speed refer to the "MIXER SETTINGS" paragraph.
The changes made will NOT be saved in the program, and will only be valid for the phase currently running!

Whenever the mixer is turned off voluntarily, the key flashes to indicate that the mixer is required for that phase.
Attention: if during the current phase (where the program involves the mixer) you manually decide not to choose any type of mixing (all 3 buttons light grey), the key does NOT flash!

Attention:
When opening the lid (PRI..M) the mixer automatically operates at minimum speed and only rotates clockwise. When the lid is closed, the mixer returns to the set values.

When the pan is tilted, the mixer stops automatically. To facilitate product unloading, the mixer can be operated (only at minimum speed and in a clockwise rotation) by keeping the key pressed

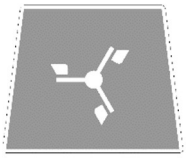

When the pan returns to the horizontal position, the mixer MUST be restarted!

23 MOVING THE PAN

To move the cooking vessel, keep pressed the corresponding key on the display or external keypad.
The keys on the display are disabled when the pan tilting limits are reached.

With a completely horizontal pan = enabled only 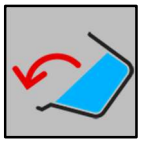

With a tilted pan = enabled only 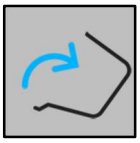

DISPLAY	KEYPAD
Pan tilting key 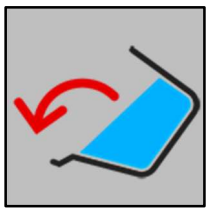 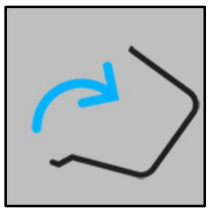 Pan return key	Pan tilting key Pan return key 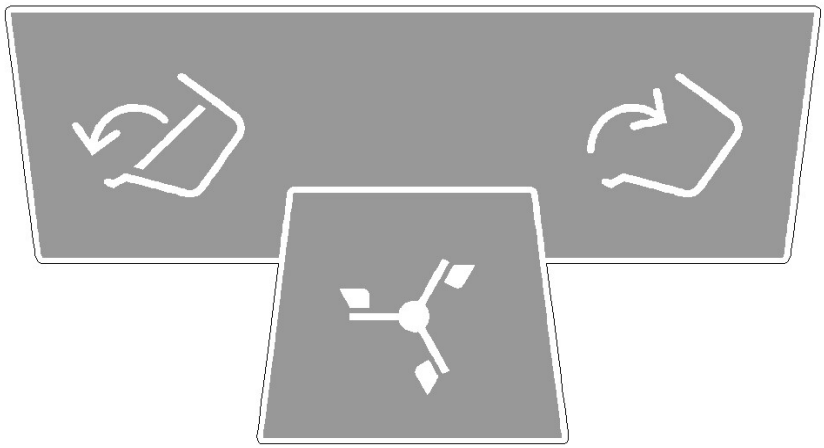

As tilting prevents the heating and mixing functions, whenever the pan is not in a horizontal position, the icon appears.

ATTENTION: when cooking with tilted pan (UCBTE ..) the icon only appears when tilted above 20°. If you want to cook, as soon as this icon appears, press the return key up to the desired tilt angle (from horizontal position until the icon appears).

Any messages that prevent pan movement appear in the left column.

Icon	Description
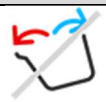	Pan movement not allowed

ATTENTION: In machines with mixer, to make it easier to empty the product, the mixer can be operated (only at minimum speed and in a clockwise direction) by keeping the key pressed.

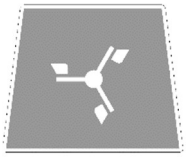

To return the pan to the horizontal position, press and hold the corresponding key**, until the icon** disappears.

ATTENTION: The presence of the icon 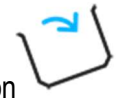 prevents the cooking functions of the machine.

24 CLEANING AND CARE

24.1 GENERAL INFORMATION

Do not use aggressive substances or abrasive detergents when cleaning stainless steel parts.

Avoid using iron scourers on steel parts as rust formation may occur. For the same reason avoid contact with ferrous materials.

No sandpaper or abrasive paper should be used during cleaning. In special cases, pumice stone may be used in powder form.

In the event of particularly resistant dirt, we recommend the use of abrasive sponges (e.g. Scotch-Brite).

24.2 DAILY CLEANING

Always wear protective clothing required by current regulations.

For safety reasons, clean the machine when it is cold and off (with the emergency button pressed) (or on stand-by if cooking with delay timer).

When cleaning the appliance **never spray water directly in order not to cause infiltration and damage to the parts.**

Never use water jets in the flue in gas versions.

Clean the pan with water and detergent, rinse well and dry thoroughly with a soft cloth

Clean the outside with a sponge soaked in hot water and a suitable detergent readily available on the market.

Always rinse well and dry with a soft cloth.

24.3 MIXER CLEANING

To facilitate cleaning operations, the mixer can be removed from the pan by following the instructions below:

-Tilt the cooking vessel up to 30-40°.

- Unscrew the "**mixer locking ring**"(01)

- Extract the "**mixer"** (02) taking care not to lose the Teflon sealing ring (03).

Gently place the mixer on the ground. The forged steel blades could get damaged!! It is better to place the mixer on its side, rather than with the blades directly on the ground.

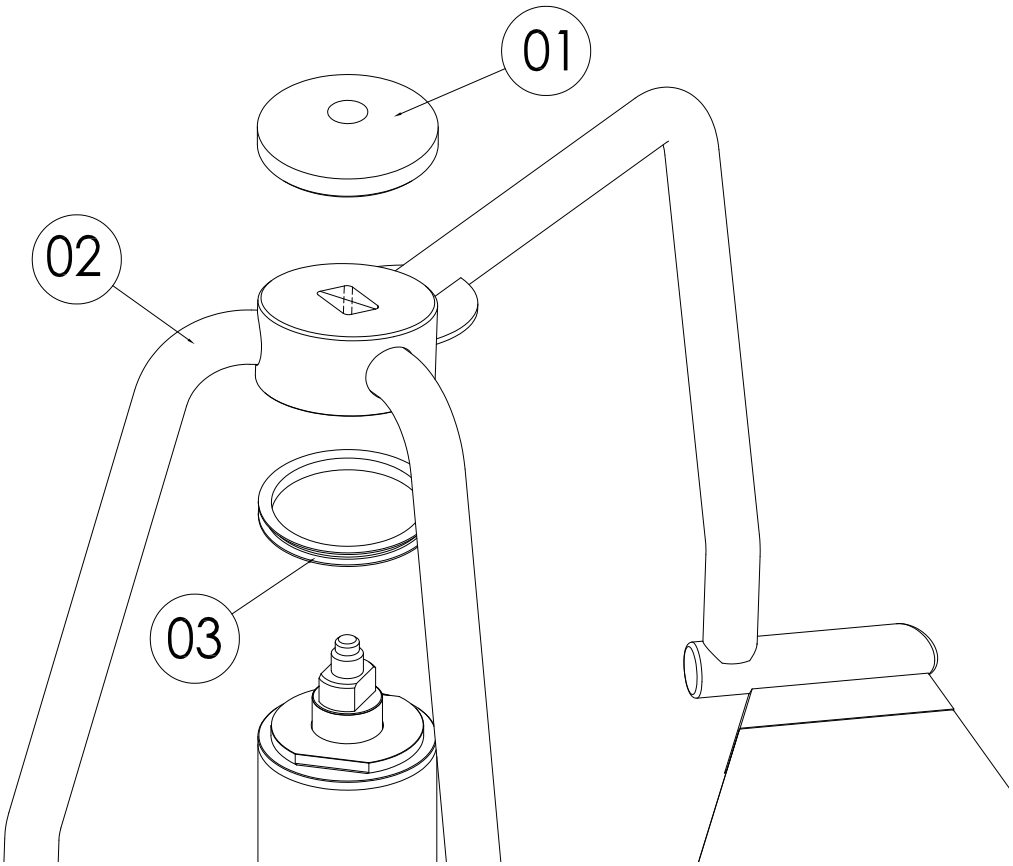

- Remove and clean the scrapers according to the following instructions

ASSEMBLED SCRAPING

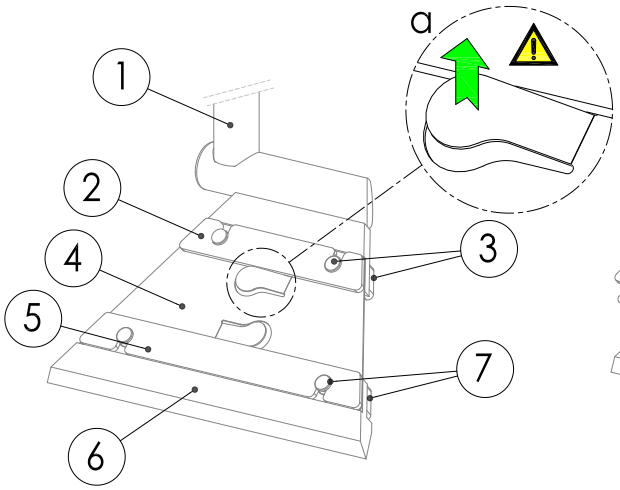

DISASSEMBLED SCRAPER

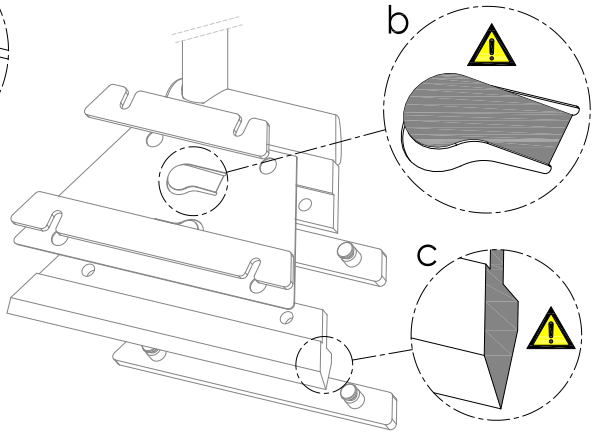

- Press on the upper lever of the part 4 and slide the part 2 out of the pins - Extract the part 3.	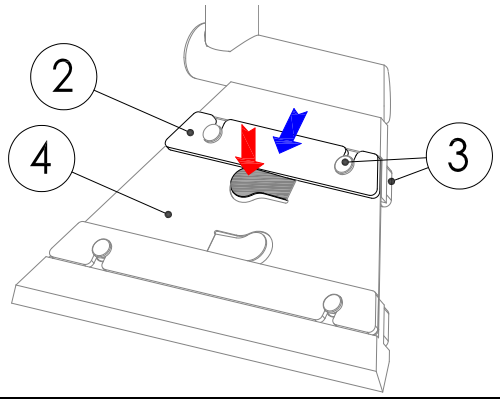
- Press on the lower lever of the part 4 and slide the part 5 out of the pins - Remove parts 6 and 7.	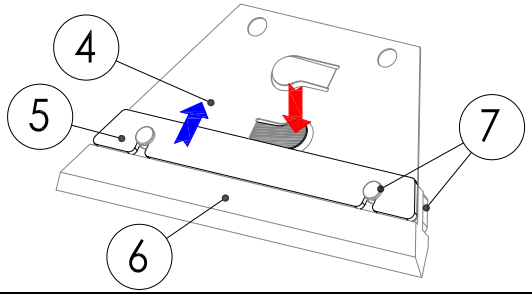

- Accurately clean all the disassembled parts (including mixer and the teflon ring)

- Reassemble the scrapers paying attention to:

- comply with Teflon profile orientation (detail c)
- part 4 with the levers mounted upwards (detail b)
- part 4 must be centered with the pin.It must not stop in the throat of the pin!

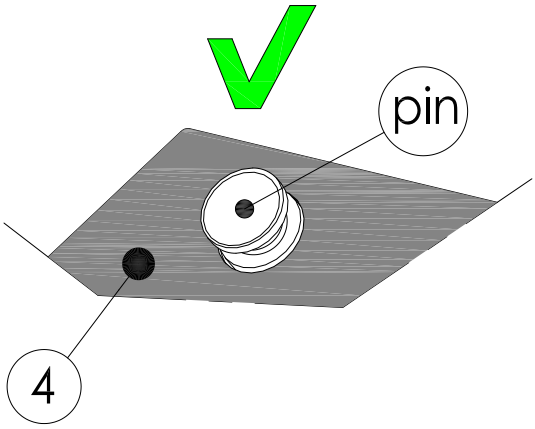

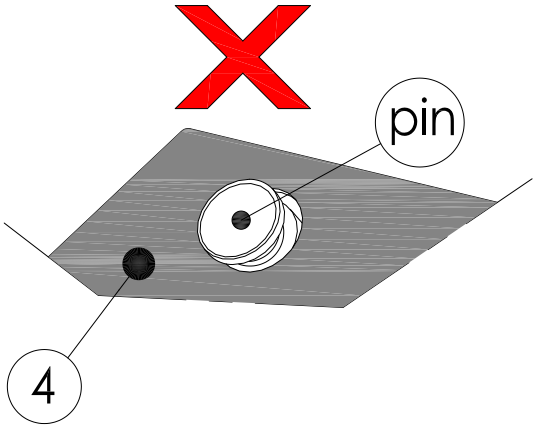

- when the details 3 and 5 are mounted, the levers of the detail 4 must snap upwards (detail a)

- Refit the Teflon ring, the mixer and the locking ring nut.
- Return the pan to a horizontal position.

24.4 ASSEMBLY AND DISASSEMBLY VERTICAL SCRAPER FROM THE MIXER

The vertical scraper (1) must always be mounted in the external mixer arm (3), where the locking bracket (2) is present.

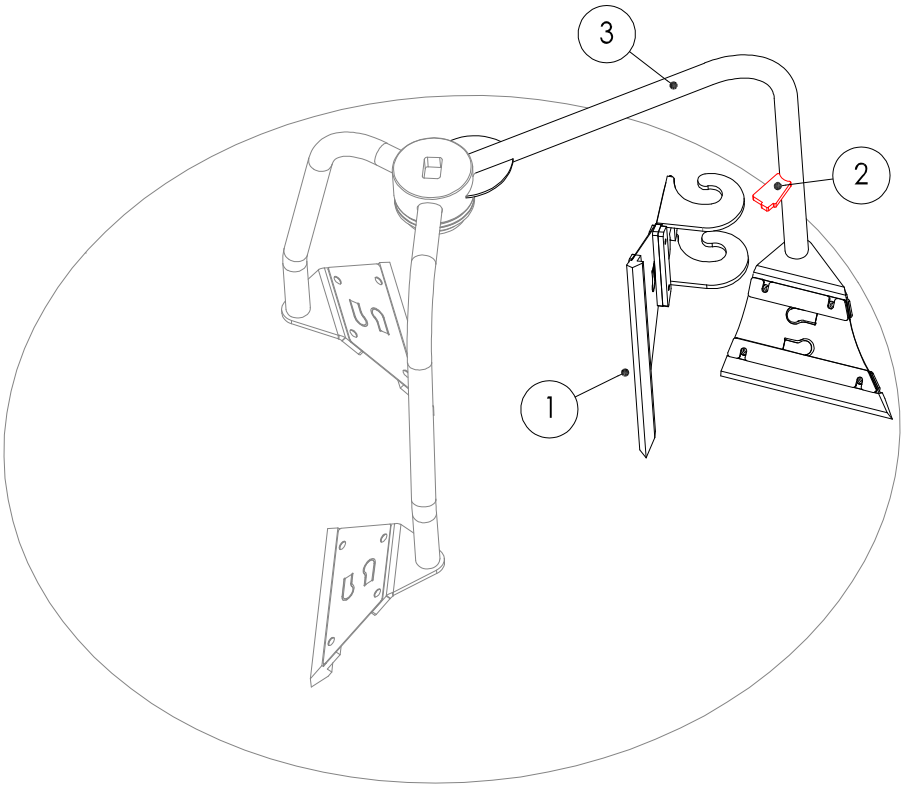

To **assembly** the vertical scraper at the mixer, follow the instructions below:

a) Enter the vertical scraper in the external arm.

b) Lift the vertical scraper up to the stop with the locking bracket.

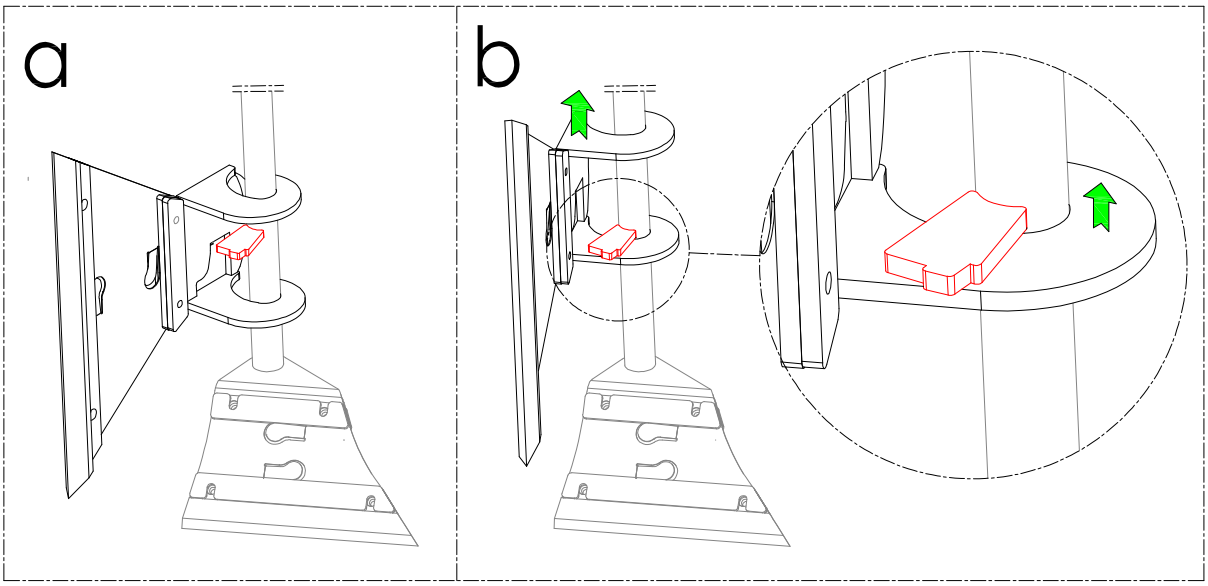

c) Turn the vertical scraper towards the wall of the vessel.

d) Lower the vertical scraper until the tooth of the block is inserted on the vertical scraper.(see detail).

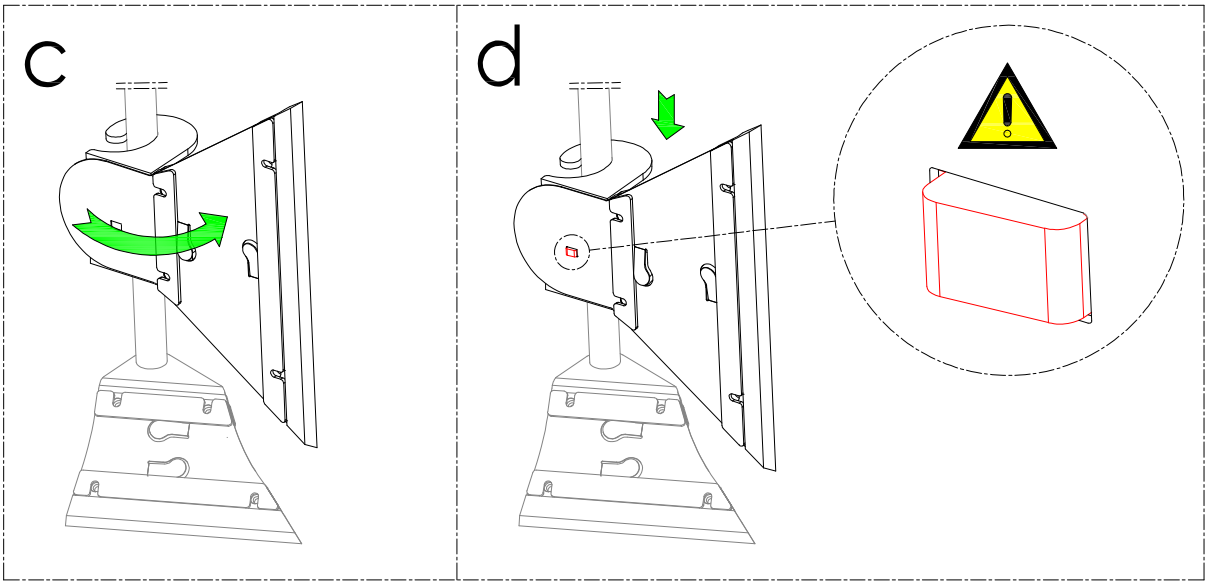

To **disassembly** the vertical scraper from the mixer, follow the instructions below:

a) Lift the spring until it releases with the tooth and simultaneously raise the vertical scraper .

b) Turn the vertical scraper towards the center of the vessel.

c) Extract the vertical scraper from the external arm.

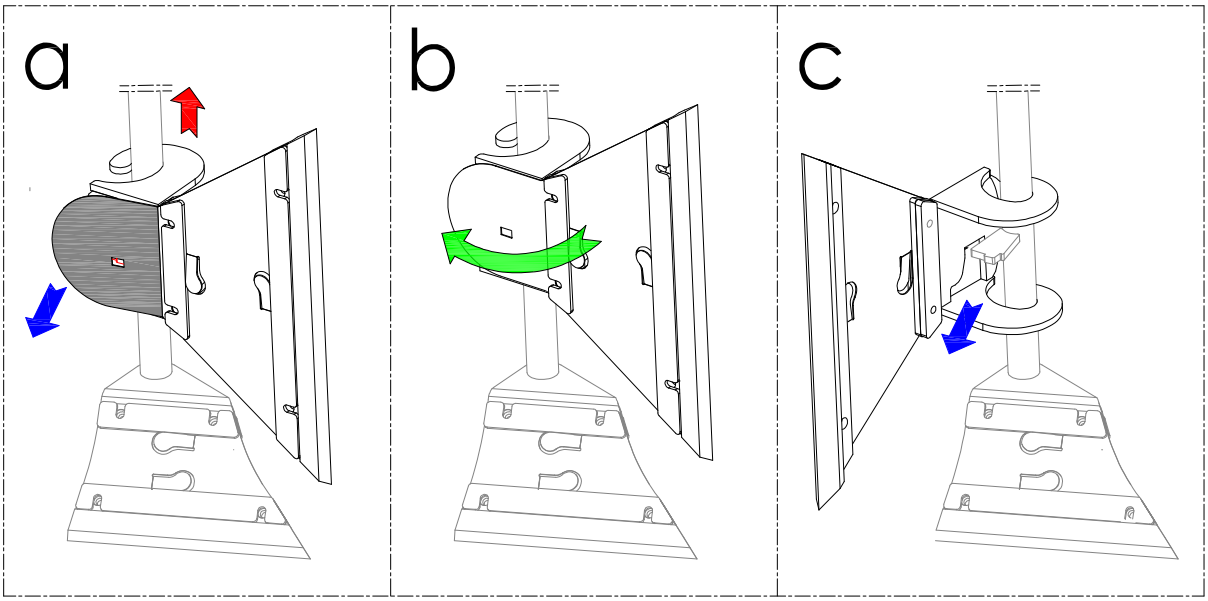

For the cleaning of vertical scraper see "MIXER CLEANING" paragraph

24.5 PRECAUTIONS IN CASE OF PROLONGED INACTIVITY

If the appliance has been inactive for a prolonged period of time (holidays, seasonal work...), clean well, remove any residue and ensure it is dry.

Leave the lid open so that air can circulate inside the pan.

The room must be sufficiently ventilated.

Disconnect all water, electricity and gas supplies.

24.6 PRECAUTIONS IN CASE OF MALFUNCTION

- Should malfunctions occur during use, switch off the appliance immediately and disconnect or stop all supplies (gas and water).
- Request assistance from technical support or a qualified technician.

The manufacturer assumes no responsibility or warranty commitment for injuries and damage due to non-compliance with the instructions or any installation or maintenance that does not comply with safety standards.
The same applies in case of improper use of the appliance by the operator.

25 MAINTENANCE

25.1 MAINTENANCE OF THE APPLIANCE

All maintenance work must only be performed by a specialist technical service centre!

- In order to keep the appliance working efficiently, it is advisable to perform annual maintenance, which includes checking the status of components subject to wear and tear (pipes, etc.).
- It is advisable to replace any worn components during maintenance, in order to avoid further call outs and unexpected issues and faults with the appliance.
- Therefore, it is recommended to sign a maintenance contract with a reliable technical support centre.

25.2 PERIODIC MAINTENANCE

Periodic inspections will minimise machine downtime and increase operating efficiency.

The following points must be checked:

Periodic inspections will minimise machine downtime and increase operating efficiency.

The following points must be checked:

BY OPERATOR

DAILY CHECKS

1. **Thoroughly clean the machine daily**

WEEKLY CHECKS

2. **Check the wear of the Teflon scraper (01). If it needs replacing, contact technical support.**

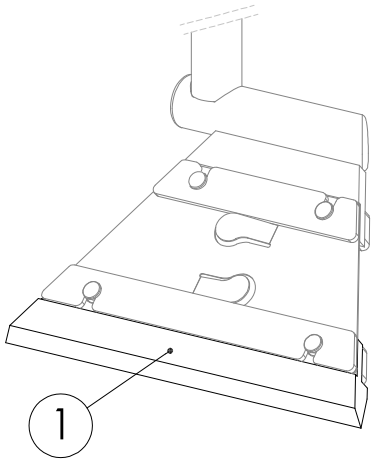

QUARTERLY CHECKS

7. **Clean the mixer motor fan with compressed air or a suction device.**

8. **Check the following are undamaged and intact:**
   - Screen controls, switches, warning lights.
   - Emergency button:

   Contact technical support if they are damaged.

BY SERVICE TECHNICIAN

For each operation:

- Carefully close all the panels. .
- The inside of the appliance should be kept clean.
- Electrical wiring should be kept securely connected and in good condition.

ANNUAL CHECKS / ACTION

1. Check coupling panels, must be perfectly closed with all the screws.
2. Check the sealing water system (load tap water).
3. Check that terminals connections of electrical parts are well fastened. Clean electrical parts .
4. Cleaning the fan motor mixer with compressed air or vacuum cleaner.
5. Verify the integrity of mixer motor electric cable. If damaged, replace it(with original spare parts).

6. Replace mixer engine gaskets (Annual or after 2700h working mixer). With the key, unscrew the cap (1) and replace the gaskets (2-3). This maintenance requires the use of suitable grease cod. 70400172.

   Attention to closing the cap; Do not force too close (risk of seizing the threads!)

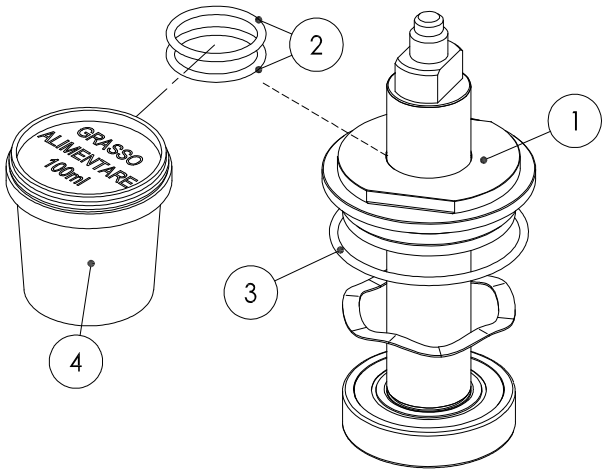

26 DISPLAY MESSAGES

Message	Meaning	Solution
	Safety thermostat has been triggered **The safety thermostat can be disarmed during transport without any issues.**	**Reset the thermostat from the lower panel on the right hand side, by pressing firmly on the red thermostat key.** **If the thermostat is triggered again, contact the support centre.**
	Insufficient gas pressure. It is not possible to start cooking.	Verify that gas is supplied and that the pressure is sufficient. **Contact the support centre.**
!! BLOCK GAS DEVICE !! PRESS **RESET** 	**If a cooking phase has started and insufficient gas pressure has been detected on 4 consecutive occasions or there is a fault on the flame detection system, the central unit will be interrupted.**	Press "RESET". After 3 RESET attempts, the message below appears.
!! GAS SYSTEM ANOMALY!! CONTACT TECHNICAL ASSISTANCE	**Problem with the gas system: gas central unit fuses, gas solenoid valve, spark plugs and pilot light plug.**	Contact technical support.
PROBES ERROR	**One or more of the appliance's sensors/probes are faulty (or not connected). Cooking methods that use these sensors/probes will be disabled (light grey) until they are repaired.**	Contact technical support.
INTERNAL ERROR	**Connection error between the relay board and keypad board** **System board error.**	**Switch the appliance off, and switch back on after two minutes, if the problem persists, call a technician**
BLACK OUT ERROR	**t.b.d**	

INVERTER ERROR	**Connection error between relay board and inverter**	Contact technical support.
EXTERNAL MEMORY ERROR	**SD memory card not available.**	Contact technical support.
OUTPUT CONFIGURATION ERROR	**PROGRAMMING ERROR. Dual output assignment!!**	Contact technical support.